ACORN COMPUTER

Electron
Service Manual

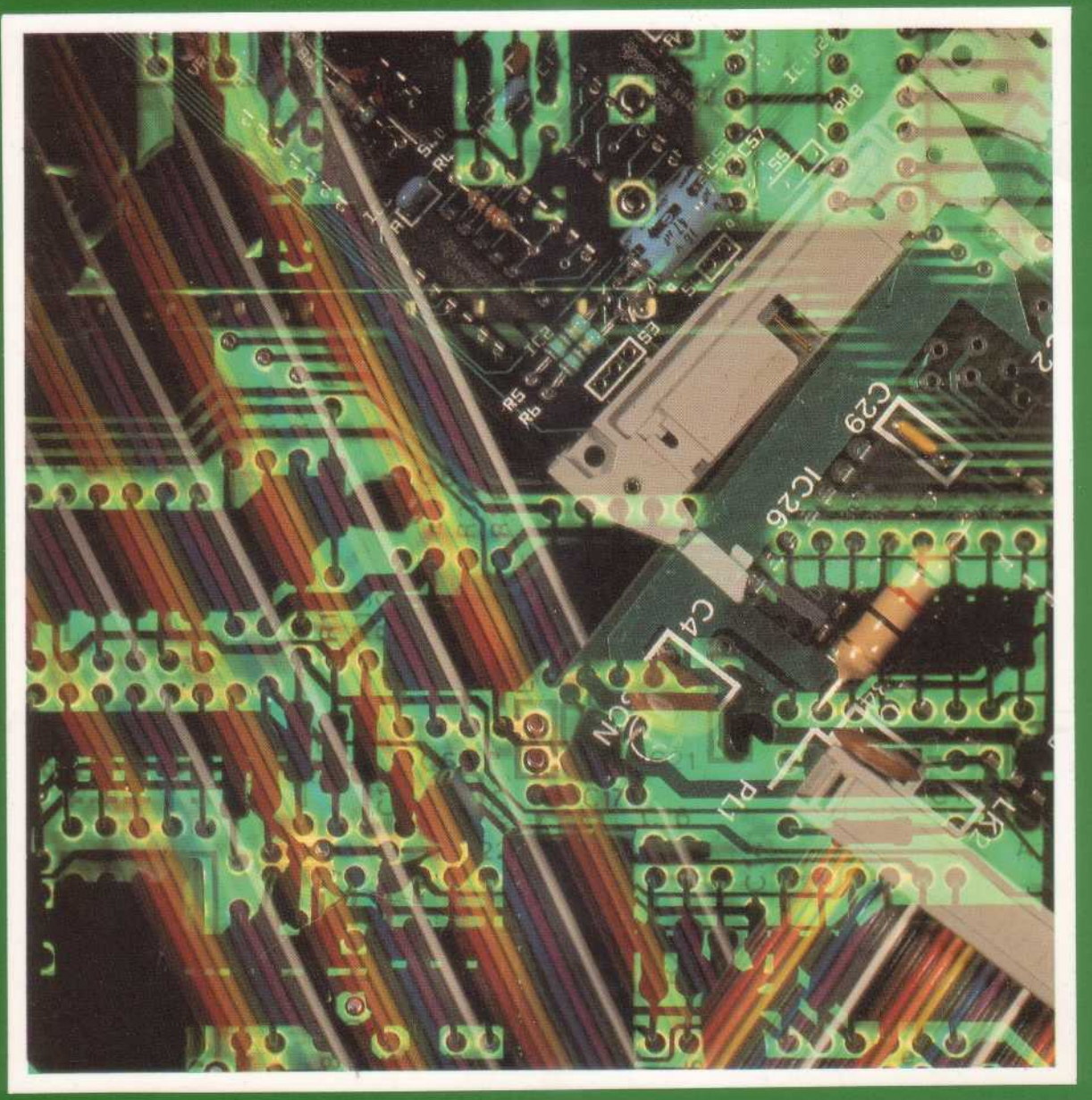

Electron Service Manual

Part no 0405001
Issue no 2
Date January 1987

© Copyright Acorn Computers Limited 1984
Neither the whole or any part of the information contained in, or the product described in, this manual may be adapted or reproduced in any material form except with the prior written approval of Acorn Computers Limited (Acorn Computers).

The product described in this manual and products for use with it are subject to continuous development and improvement. All information of a technical nature and particulars of the product and its use (including the information and particulars in this manual) are given by Acorn Computers in good faith. However, it is acknowledged that there may be errors or omissions in this manual. A list of details of any amendments or revisions to this manual can be obtained upon request from Acorn Computers Technical Enquiries. Acorn Computers welcome comments and suggestions relating to the product and this manual.

All correspondence should be addressed to:
Technical Enquiries
Acorn Computers Limited
Fulbourn Road
Cherry Hinton
Cambridge CB1 4JN

All maintenance and service on the product must be carried out by Acorn Computers' authorised dealers. Acorn Computers can accept no liability whatsoever for any loss or damage caused by service or maintenance by unauthorised personnel. This manual is intended only to assist the reader in the use of the product, and therefore Acorn Computers shall not be liable for any loss or damage whatsoever arising from the use of any information or particulars in, or any error or omission in, this manual, or any incorrect use of the product.

This manual is for the sole use of Acorn Computers' authorised dealers and must only be used by them in connection with the product described within. This manual remains the property of Acorn Computers at all times and must be returned to them immediately upon the termination of the dealer's appointment.

First published 1984
Published by Acorn Computers Limited
Typeset by Bateman Typesetters, Cambridge

Contents

1 Introduction 1

2 Packaging and installation 2

3 Specification 3

3.1 Acorn Electron microcomputer 3
3.2 Machine operating system 3
3.3 BASIC 4
3.4 Power supply 4
3.5 Cassette interface 4
3.6 Video outputs 4
Modulated output 4
Composite video 5
Colour monitor 5
3.7 Audio output 5
3.8 Environment 5

4 Disassembly and assembly 6

5 Circuit description 7

5.1 General 7
5.2 PCB links 7

6 The uncommitted logic array (ULA) 8

7 Electron test equipment 9

8 Fault finding inside a dead Electron 10

8.1 Power supply 10
8.2 Oscillator 10
8.3 ULA 10
8.4 CPU 11
8.5 ROM 11
8.6 DRAMs 11
8.7 Video 11
8.8 Cassette interface 13
8.9 Keyboard 14
8.10 Sound 14

Appendix

Diagnostic flowcharts 15
Final assembly 25
Electron block diagram 27
Functional block diagram of the Electron ULA 29
Main PCB circuit diagram 31
Main PCB layout 33
Main PCB silk-screen 35
Electron power supply board circuit diagram 37
Keyboard matrix 39
Electron parts lists 41

1 Introduction

This manual is intended to provide the information required to diagnose and repair faults on the Electron microcomputer which was designed by Acorn Computers Limited of Cambridge, England.

The information contained in this manual is aimed at service engineers and Acorn dealers who will be servicing the Electron microcomputer on behalf of Acorn Computers Limited.

2 Packaging and installation

The Electron microcomputer is supplied in a two-part moulded polystyrene packing which is further packaged within a cardboard sleeve. Supplied with the microcomputer is a User Guide, a book called *Start Programming with the Electron,* an Introductory Cassette package, a UHF TV lead, and a mains power adapter.

The mains supply for UK models is 240V AC 50Hz. Power is delivered to the microcomputer from a separate mains power adapter which has a built-in square pin plug. This plug cannot be changed, and if it is unsuitable for the socket outlet available then an adapter must be used.

The output from the mains power adapter is 19V AC 50Hz at 14 watts.

The lead on the mains power adapter plugs into the microcomputer in a socket on the right side. This socket is labelled 19V.A. C. POWER IN on the bottom of the machine.

Do not use the microcomputer in conditions of extreme heat, cold, humidity or dust or in places subject to vibration. Do not block ventilation under or behind the computer. Ensure that no foreign objects are inserted through any openings in the microcomputer.

3 Specification

3.1 Acorn Electron microcomputer

A fast, powerful, self-contained computer system generating high resolution colour graphics and capable of synthesising music or noise. The computer is contained in a rigid injection moulded thermoplastic case. The computer provides the following facilities.

A 56-key full travel QWERTY keyboard with ten user definable function keys, two-key rollover, and auto-repeat.

The internal loudspeaker is driven from a music synthesis circuit with envelope control.

A modulated 625-line PAL A UHF colour television signal (channel E36) for connection to a normal domestic television aerial socket is available through a phono connector.

A 6-pin DIN RGB connector supplies output for use with a colour monitor.

A phono connector supplies a video output to drive a black and white monitor.

A standard audio cassette recorder can be used to record computer programs and data files at 1200 baud using the CUTS standard tones. The cassette recorder is under automatic motor control and is connected to the computer via a 7-pin DIN connector.

An interrupt driven elapsed time clock enables real time control and timing of user responses.

The unit uses a 2MHz 6502 and includes 32K of read/write Random Access Memory.

A 32K Read Only Memory (ROM) integrated circuit contains an extensive and powerful machine operating system, and an extremely powerful and fast BASIC interpreter. The interpreter includes a 6502 assembler which enables BASIC statements to be freely mixed with 6502 assembly language.

The standard television output is 625-line 50Hz, interlaced, fully encoded PAL, modulated on UHF channel 36.

The display modes provide user definable characters in addition to the standard upper and lower case alphanumeric font. Graphics may be freely mixed with text. Text characters can be positioned not only on, for example, a 40 X 32 grid, but at any intermediate position in graphics modes.

Separate or overlapping text and graphics windows can be easily user defined over any area of the display. Each of these windows may be filled and scrolled separately.

The Electron is able to support the following modes:

0 640 X 256 two-colour graphics and 80 X 32 text (20K)

1 320 X 256 four-colour graphics and 40 X 32 text (20K)

2 160 X 256 sixteen-colour graphics and 20 X 32 text (20K)

3 80 X 25 two-colour text (16K)

4 320 X 256 two-colour graphics and 40 X 32 text (10K)

5 160 X 256 four-colour graphics and 20 X 32 text (10K)

6 40 X 25 two-colour text (8K)

The installed RAM is divided between the high resolution graphics display, the user's program, and machine operating system variables. The MOS requires 3.5K of RAM.

3.2 Machine operating system

A 32K byte ROM is used for both the MOS and the BASIC interpreter. The MOS software controls all input/output devices using a well defined interface. The MOS supports the following interrupts:

– Event timer (used as elapsed time clock).
– Vertical sync.

– Keyboard and keyboard buffer.
– Serial interface, input and output, and buffers.

Many of the operating system calls are vectored to enable the user to change them if required.

3.3 BASIC

The BASIC interpreter is a fast implementation, very close to Microsoft standard but with numerous powerful extensions:

– Long variable names.
– Integer, floating point and string variables.
– Multi-dimension integer, floating point and string arrays.
– Extensive support for string handling.
— **IF...THEN...ELSE.**
— **REPEAT...UNTIL.**
– Multi-line integer, floating point and string functions.
– Procedures.
– Local variables.
– Full recursion on all functions and procedures.
– Effective error trapping and handling.
– Cassette loading and saving of programs and data.
– Full support for the extensive colour graphics facilities.
– Easy control of the built-in music generation circuits.
– Built-in 6502 mnemonic assembler enabling BASIC and assembler to be mixed, or pure assembly language programs to be produced.

3.4 Power supply

Transformer:	Maximum AC input	264V AC
	Minimum AC input	216V AC
	Rating	14 watts
	Supply frequency	47 to 63Hz
Power supply module:	Maximum AC input	20.9V RMS
	Minimum AC input	17.1V RMS
	Maximum current	+5V rail – 1.5A
		–5V rail – 100mA

3.5 Cassette interface

Output impedance	Less than 1k ohms
Input impedance	Greater than 100k ohms
Output level	Nominal 200mV peak to peak, 70mV RMS
Dynamic input range	Nominal 50mV to 5V peak to peak, –25 to +15dB, 0dB 350mV RMS
Motor control	By miniature relay within computer
	Contact rating 1A at 24V DC
Baud rate	1200 baud using standard CUTS tones
Connector	7-pin DIN socket

3.6 Video outputs

Modulated output

Standard	625-line PAL A UHF colour television signal
Channel	E36
Vision carrier	Nominal 591.25MHz
RF output	1.0 to 2.5mV
6db bandwidth	15 to 20MHz
RF output impedance	75 ohms
Connector	Phono

Composite video

Output level	Nominal 1V peak to peak
Output impedance	Nominal 75 ohms
Option	Chrominance information (wire selectable) allows composite PAL monitors to be used
Connector	Phono

Colour monitor

RGB signals	TTL type levels
CSYNC signal	TTL type level +ve/–ve going (link selectable)
Connector	6-pin DIN

3.7 Audio output

Loudspeaker	1.5" diameter
Impedance	16 ohms
Rating	0.2 watt
Output power (from computer)	Nominal 0.1 watt maximum

Note: Sound circuit is largely independent of loudspeaker impedance.

3.8 Environment

Air temperature	System on: 0 to 35°C System off: –20 to 70°C
Humidity	System on: 85% relative humidity at 35°C System off: 95% relative humidity at 55°C
Storage conditions	Air temperature: –20 to 70°C Humidity: 95% relative humidity at 55°C

4 Disassembly and assembly

To service the Electron, disconnect the power supply lead and undo the four fixing screws underneath, two recessed in the front corners and two in the cutaway portion on the back edge. (The assembly diagram is given in the Appendix.) When you split the computer the keyboard is attached to one half and the two PCBs are in the other. These two halves are connected to each other by a short piece of ribbon cable. The ribbon cable is attached to the main PCB by a socket, which should be unplugged before carrying out repairs. (Note however that the Electron will not run without the keyboard connected.)

The keyboard can be removed from the top case by undoing the five philips screws which hold it in place.

The bottom case contains two PCBs, the smaller one being the power supply board. This is connected to the main PCB by a socket and two 'faston' tabs which are marked 18V AC and lead only to the expansion port. The socket connects three wires to the main PCB: red +5V, blue —5V, black ground. The loudspeaker is also connected to the main PCB via a socket. All of these sockets and wires may be unplugged to allow removal of the PCBs from the bottom case.

The main PCB is held in place by four philips screws, the power supply PCB by three.

5 Circuit description

5.1 General

The microprocessor used in the Electron is a 6502A with the clock signals provided by a 16MHz crystal oscillator (IC8) in conjunction with divider circuitry in the ULA (IC1). The 6502 runs at three speeds depending on what is being accessed:

2MHz: The processor will run at 2MHz during an access cycle to the ROM. This is because the ROM is being accessed only by the processor which has a maximum speed of 2MHz.

1MHz: The processor will run at 1MHz during an access cycle to the RAM. The processor and the video are competing for access to the RAM, and the RAM can only support a bandwidth of 2MHz. In screen modes 4, 5 and 6 this is no problem since the screen only needs 1MHz access to the RAM.

Stopped: In screen modes 0, 1, 2 and 3 the screen uses all the available memory time slots during the display period. The processor is denied RAM access during 40 microseconds of each 64 microseconds of the 256 lines in 312 which is the display period, and it is made to wait for RAM access until the end of the period.

Random Access (read/write) Memory on the Electron is provided by four 64Kbit dynamic memory devices (ICs 4 to 7), giving 32Kbytes in all. This means that to read a byte from memory requires two accesses. IC4 contains bit 0 and bit 1, IC5 contains bit 2 and bit 3, IC6 contains bit 4 and bit 5, and IC7 contains bit 6 and bit 7. The mechanism for doing this is handled by the ULA.

The timing diagram for the DRAMs is shown below.

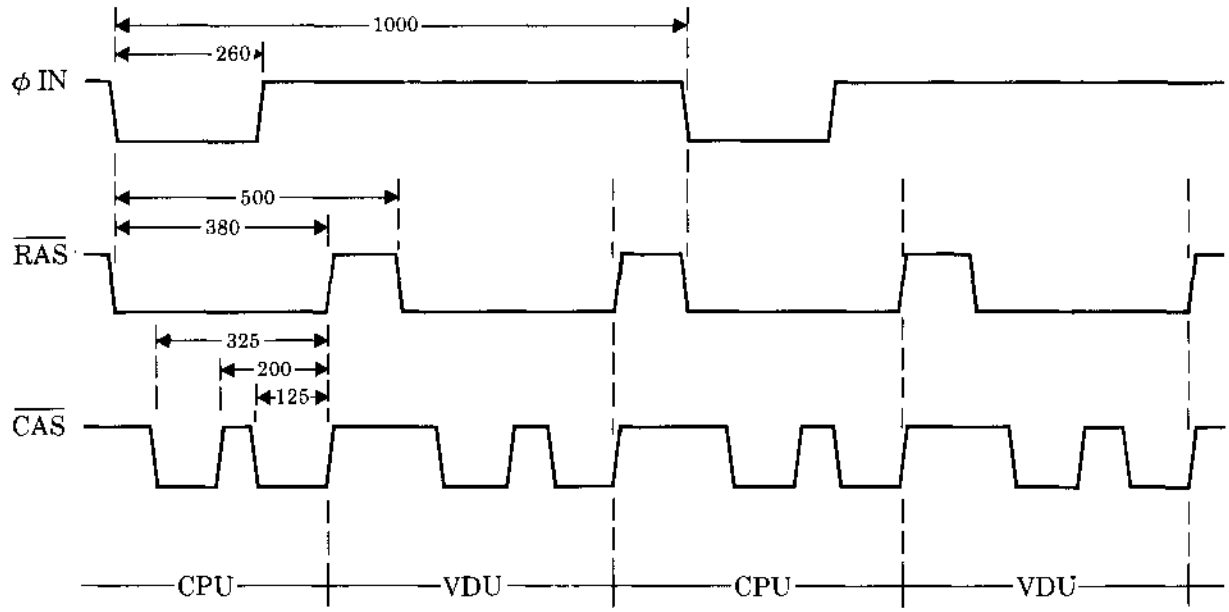

Figure 1 DRAM timing diagram Timing in nanoseconds

5.2 PCB links

There are several links on the Electron PCB, most of which are hard-wired in the correct position. The action of these links can be ascertained from the circuit diagram (see Appendix), but two are of special interest:

LK3 controls the action of CSYNC. LK3 is set to ground as standard, and setting LK3 to +5V causes CSYNC to be inverted. The correct setting will depend on the type of RGB monitor in use.

LK4 is normally open circuit. If it is made it adds the chrominance component to the composite video output. This is useful when debugging the video circuitry (see chapter 8) and also, of course, when using a colour composite monitor.

6 The uncommitted logic array (ULA)

The ULA (IC 1) coordinates every function of the computer. It is contained in a quad in-line package, pin 1 being marked at the top left of the chip, and the other pins following consecutively anti-clockwise around the package. (For the method of removal of ULA from its holder see 8.3.) It has 68 pins in all. Each pin, as labelled on the circuit diagram (see Appendix), functions as follows:

CAS OUT: Pseudo sinusoidal output to cassette circuitry. 1.8V peak to peak:

CAS RC: This is an input/output connected to an RC circuit. The RC is used to detect a continuous period of high tone on the cassette input.

CAS MO: This output drives the transistor which operates the tape motor relay:

CAS IN: This is the input from the cassette circuitry which goes to the ULA cassette deserialiser. The input voltage should be between 0.5V and 2V peak to peak.

SOUND 0/P• Delivers a tone to the speaker from an internal oscillator.

POR (power on reset): On power up, the RC circuit connected to this input provides a +ve edge to reset parts of the ULA, and to cause the ULA to activate the RST line which resets the processor.

CSYNC: This output is part of the CRT control circuitry and is low during either a horizontal synchronisation period or during a vertical synchronisation period, and is high at all other times.

RED, GREEN, BLUE: These TTL outputs are active high and give the current pixel colour.

HS: This output is part of the CRT control circuitry and is low during a horizontal synchronisation period and high at all other times:

CLOCK IN: 16MHz clock input.

÷13 IN: Divided by 13 clock input.

RAMO . : : RAMS: Data lines to and from the RAM. Data flow is controlled by RAS, CAS and WE.

WE: The write enable line at logic 0 selects a write operation to the RAM and at logic 1 selects a read operation from the RAM.

RAS: The row address strobe latches the row address into the RAM on a —ve edge and also controls refresh. *CAS:* The column address strobe latches the column address into the RAM on a —ve edge. *RAO : : : RA7:* RAM address lines which send both row and column addresses to the RAM: *KBDO : : : KBD3:* Direct inputs from the keyboard.

CAPS LOCK: Output which controls the CAPS LOCK LED.

RST: Master reset for the 6502: Enabled on power up and when the **BREAK** key is pressed. *ROM:*
ROM select output which enables data to be read from the ROM.

AO : : : A15: Processor address lines which take memory address information from the 6502.

PDO : : : PD7: Processor data lines which send data to and receive data from the 6502:

NMI: The ULA is responsible for all RAM accesses and uses the NMI input to determine whether the processor should have full 1MHz access to the RAM regardless of screen mode.

PHI OUT: This output provides the processor with its clock. The processor works at one of three speeds: 2MHz, 1MHz and stopped. It is derived from the 16MHz input.

IRQ: This output is used by the ULA to interrupt the processor when certain events within the ULA have occurred:

R/W: This is an input through which the processor tells the ULA the direction of data on the data bus, logic 0 for processor write and logic 1 for processor read:

(A functional block diagram of the ULA is given in the Appendix.)

7 Electron test equipment

Two test systems are available for the Electron, and can be purchased from Acorn Computers Limited: The 'PIT test' (production inspection test) can sometimes identify the area of the Electron in which the problem lies.

The 'Electron Watchdog' is a soak testing device which is used to show up intermittent faults: Full operating instructions are supplied with the equipment:

8 Fault finding inside a dead Electron

This chapter will take you step by step through fault diagnosis inside the Electron, assuming that any part of the machine could be faulty. If you know roughly the area in which you believe a fault lies then you can go straight to that part of the analysis. This chapter should be studied in conjunction with the circuit diagram and block diagram of the machine and flowcharts which are given in the Appendix. Obviously with some machines fault diagnosis will not be possible.

8.1 Power supply

Using an AC voltmeter, measure the output from the mains power adapter when it is plugged into a working Electron. (The measurement can be made most easily across the two grey leads where they connect to the power supply PCB.) The voltage should be at least 17V RMS. If not then replace the mains power adapter.

Next, remove the power supply connector from the right side of the Electron's main PCB. Connect a 10 ohm 2.5W resistor across the red and black leads (the +5V supply) and measure the voltage using an oscilloscope (all measurements on the power supply should be made with a resistive load drawing around 500mA from the +5V side). The voltage should be between +4:75 and +5.25 volts, and a maximum of 50mV noise is permissible.

If the mains power adapter works but the 5V supply is dead or the voltage is out of spec then replace the power supply PCB and test again. The power supply PCB is easy to work on and can be repaired if you wish (see circuit diagram).

If the +5V voltage is correct then adjust the zero volts trace to the middle of the screen on the oscilloscope and test the —5V supply across the blue and black leads (the trace should deflect in the opposite direction): The —5V supply should be tested with a 47 ohm resistive load (and keep the 10 ohm load across the +5V red and black leads): Any fault on the —5V line will show up as a cassette fault:

Now remove both resistors and test the current drawn by the main PCB from the +5V supply. The board should draw 700-900 mA from the +5V supply. If the +5V current is zero then at the same time measure the voltage: If the voltage is 5V then the main PCB has gone open circuit so look at the connectors and tracks. If the voltage is 0V then the power supply has cut out due to overload and there is a short circuit on the main PCB. The power supply is short circuit protected, and the power supply lead must be removed from the Electron for at least 15 seconds for the power supply supply board to reset.

If the current from the +5V is higher than it should be then measure the voltage. If the voltage is greater than 5.25V then replace the power supply PCB: If the voltage is in spec (4:75 to 5.25V) then one or more of the ICs or other components on the main PCB is short circuiting. Disconnect the power supply and feel which of the components is abnormally hot.

The +5V supply rails are laid out in a ring around the board, and so would have to break in two places for any section to be isolated.

Now measure the —5V current which should be approximately 25mA. If the —5V current is zero then either there is a short circuit, or the LM324 is disconnected because of a broken track.

8.2 Oscillator

Check with the oscilloscope that a 16MHz 4V peak to peak clock pulse is reaching the ULA (pin 49 of IC 1). If this signal is good then the oscillator is working: If not, check pin 8 of IC8; there could be a track broken between the two. Next check that there is 5V across pin 14 (+ve) and pin 7 (ground) of IC8. If the oscillator is not working then it could be the 74S04 (IC8), the crystal, or any of the passive components around them.

8.3 ULA

The ULA is tested before being installed in the Electron. As it is easily removed, the best way to check it is to use the machine with a known good one (a good ULA must always be kept for Electron fault diagnosis): The method of removal and insertion is as follows.

The ULA is IC 1 on the PCB, and is held in place by a square metal clip. To remove the ULA, insert a small screwdriver between the front left corner of the clip and the plastic ULA holder as shown in the diagram below, being extremely careful not to let it touch the PCB tracks (which are very easily damaged).

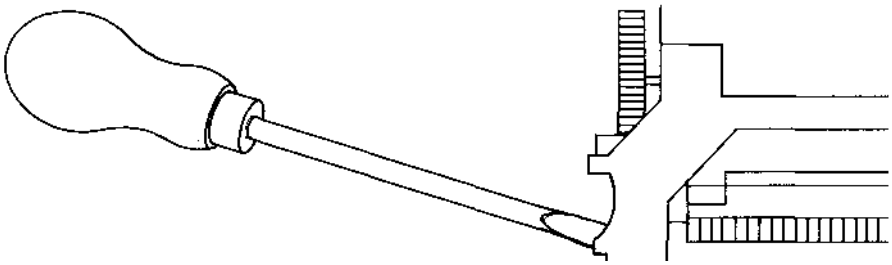

Figure 2

Twist the screwdriver until that corner unclips and then repeat the procedure for the front right corner. The clip should then spring off altogether and the ULA can be removed by turning the Electron upside down.

Insert the good ULA, making sure that the notches cut out of the three corners are in the correct position inside the carrier, and that the little metal spring in the remaining corner is not bent down under the ULA. When the ULA is seated correctly, replace the clip by pressing it on to the socket with the fingers:

Check the power supply (pins 9, 43, 48 +5V; pins 51, 68, ground; see circuit diagram).
Check that the clock output is present on pin 60. In modes 4, 5 and 6 this will be varying between 1MHz and 2MHz: In modes 0, 1, 2 and 3 there is no clock output at all for some of the time (see chapter 5).

Check that the ROM line (pin 61) is wobbling (is not fixed at one logic level). Do this also for the two RAM address strobes RAS and CAS (pin 52 and pin 53). If RAS is fixed at logic 0 then the DRAMs are very rapidly destroyed.

For a description of ULA function see chapter 6.

8.4 CPU

Check the power supply to IC3 (pins 1 and 21 ground, pin 8 +5V). Test the clock input (pin 37) which should be varying between 1MHz and 2MHz in modes 4, 5 and 6, and also stopped for some of the time in modes 0, 1, 2 and 3 (see chapter 5): Check that the IRQ (pin 4), NMI (pin 6), and R/W (pin 34) lines are wobbling (are not fixed at one logic level). If these lines are fixed then test the reset line (pin 40) which should be +5V. If it is held low then there could be a short on the PCB or the ULA could be faulty. Press **BREAK** while monitoring the reset and check that it goes to 0V.

8.5 ROM

Check the power supply to IC2 (pin 28 +5V, pin 14 ground). Check that the output enable (pin 22) is wobbling (is not fixed at one logic level), and also the address lines.

8.6 DRAMs

Check the power supply on pin 8 (+5V) and pin 16 (ground) of ICs 4, 5, 6 and 7: Check that the row and column address strobes RAS (pin 4) and CAS (pin 15) are wobbling (see figure 1 in section 5.1): If they are not then the DRAMs may be destroyed, and there is a track broken (assuming RAS and CAS are present at the ULA).

8.7 Video

Look at the displays from the three monitors (RGB, UHF and composite) and see which of the following, (a), (b), (c) or (d), best describes them.

a) If none of the monitors operates (RGB, UHF and composite) then there is no signal coming from the ULA. Replace the ULA and test again:

b) If the RGB works but the UHF doesn't then test the UHF modulator input voltage waveform using the oscilloscope. Set the oscilloscope to 50mV per division, 10 microseconds per division, auto trigger, and attach the probe to the wire shown in the diagram.

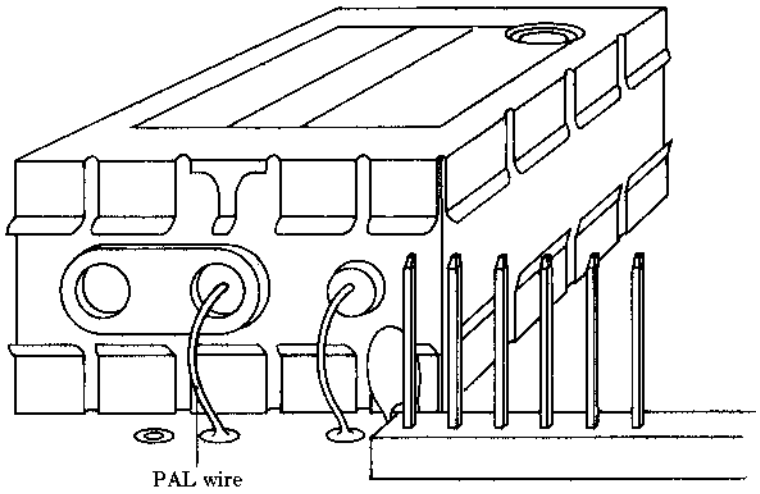

Figure 3

Press **BREAK** on the computer and check that the PAL waveform looks something like this:

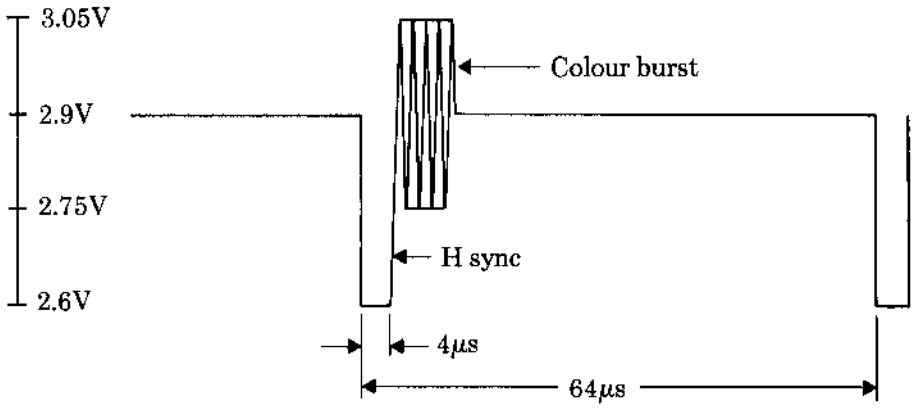

Figure 4 Black PAL voltage waveform

Type in the following:

COLOUR129: CLS

and press **RETURN .**

The waveform should now look like this:

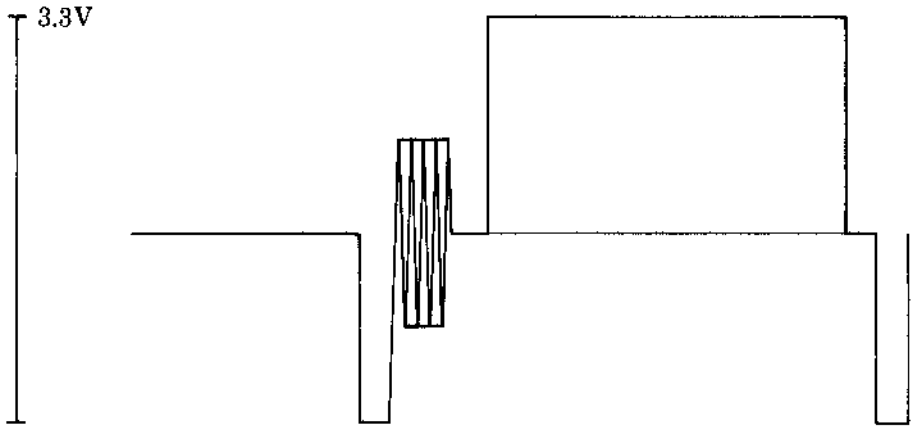

Figure 5 White PAL voltage waveform

If these waveforms are correct and the UHF monitor does not give a display then the PAL modulator is faulty and should be replaced.

If the colour burst part of the waveforms is missing then the fault lies in the chrominance circuitry (see below).

If any other part of the waveforms is incorrect, make link 4 temporarily (with a pair of pliers perhaps) and test the composite video output with the oscilloscope. The waveforms should be similar to those indicated above, but of reduced amplitude (1V peak to peak).

If the composite output waveforms are good with link 4 made (including colour burst), but the UHF output does not work, then the fault lies in the UHF luminance circuitry (Q5, D1, D2, D3, C13 and associated resistors). Check that diodes D1, D2 and D3 are inserted the correct way round (the PCB is marked +).

If the video output waveforms are bad then the video luminance circuitry (Q8 and associated resistors) is faulty, and possibly chrominance circuitry also (see below).

A composite colour monitor can be used to test the video output with link 4 made. If the composite colour monitor works in black and white only then the chrominance circuitry is faulty (see below).

c) If the RGB works and the UHF works in black and white only then the chrominance circuitry is faulty.

Test pin 6 of IC8 with a frequency counter. The measured frequency must be 17.7345MHz ± 200Hz, and can be adjusted using VC1. If there is no signal on pin 6 then debug as for the oscillator in section 8.2.

Check that the 17.7345MHz is reaching pins 3 and 11 of IC 11. IC11 is a 74S74. A 74LS74 inserted in this position can cause the circuit to fail. Check that there are signals from pins 9 and 6 of IC 11 (4.4336MHz), and also signals from pins 5 (7.7kHz approx) and 9 of IC 12.

Check that L1 has not gone open circuit and that C21 has not short circuited, and check Q7. Failing all this, test the logic circuit formed by IC 14, IC 15, IC 16, IC10 and resistors R50 to R57.

d) If the RGB picture is distorted and out of synchronisation then LK3 must be altered to invert CSYNC. LK3 must be set to suit whichever RGB monitor is being used with the computer.

8.8 Cassette interface

First test that the 16MHz clock is arriving at pin 2 of IC9.
Then test that the divided by 13 clock (812ns period) is leaving pin 11 of IC9 and is arriving at pin 55 of the ULA (IC 1). If it is not then IC9 is not working. Check the power supply to IC9, pin 16 +5V, pin 8 ground.

Check the fixed voltage connections to the LM324 (IC 13), pin 4 +5V, pin 11 –5V.
To test the cassette output, if the Electron will accept commands then SAVE a program or section of memory (from the ROM is best) and check that there is a synthesised sine-wave signal from pin 50 of the ULA of around 1. 8V peak to peak.

To test the cassette input, press **BREAK** and measure the quiescent voltage of each of the three amplifier outputs, pin 7, pin 8 and pin 14 of IC 13. This voltage should not be greater than 100mV. If any of these pins is at too high a voltage then replace the LM324. To test the input, L 0 A D a program from a cassette which is known to work and check that a signal is arriving at pin 59 of the ULA with an amplitude of between 500mV and 2V.

8.9 Keyboard

The PIT system will test the keyboard. A manual check is possible using an ohm meter and the keyboard circuit diagram. Check for shorts, dry joints and lifted tracks. Replace any faulty keys. Check that both ends of the keyboard connector cable are making good contact, that the connector on the Electron end of the cable is covering all the pins (it could be inserted with an offset and miss some of the pins), and that the cable is not damaged in any way. Check that the diodes and resistors are correctly fitted and are of the correct value.

8.10 Sound

If the Electron will accept commands then give a SOUND command and check that there is a signal from pin 62 of the ULA (IC1): If not then replace the ULA with a known good one and try again. Check all the connections in the simple amplifier circuit to the loudspeaker, especially transistors Q3 and Q4 (see circuit diagram).

Appendix

Diagnostic flowcharts

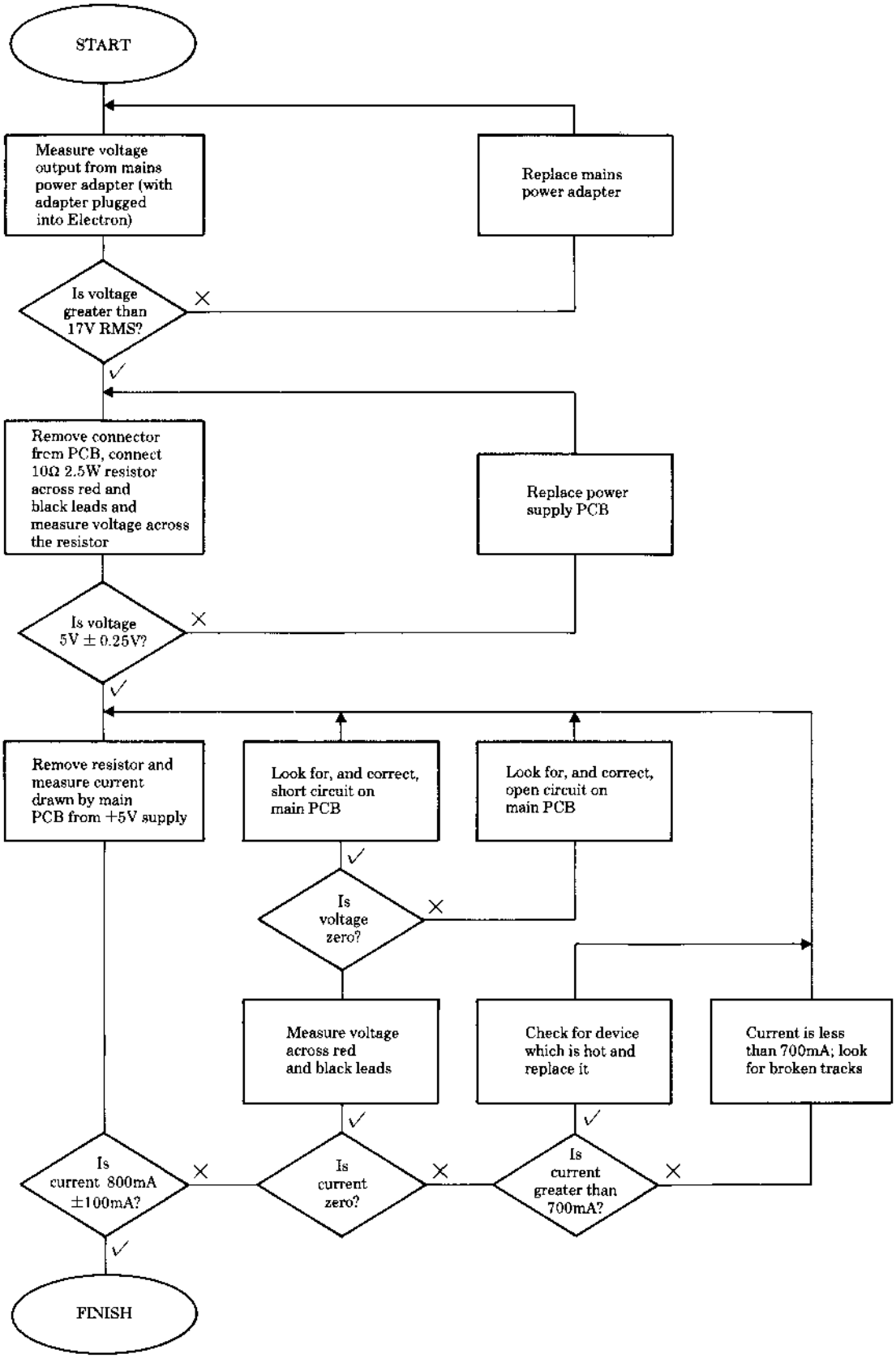

8.1 Power supply

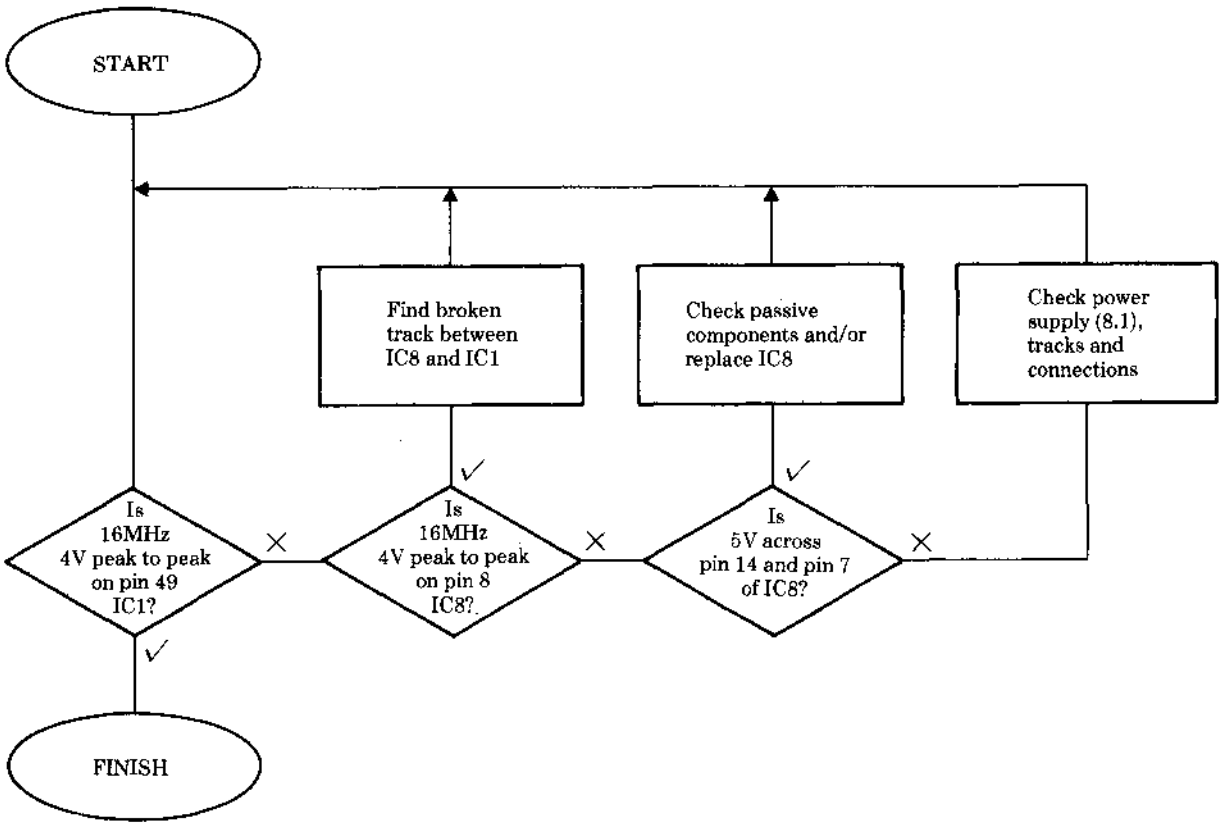

8.2 Oscillator

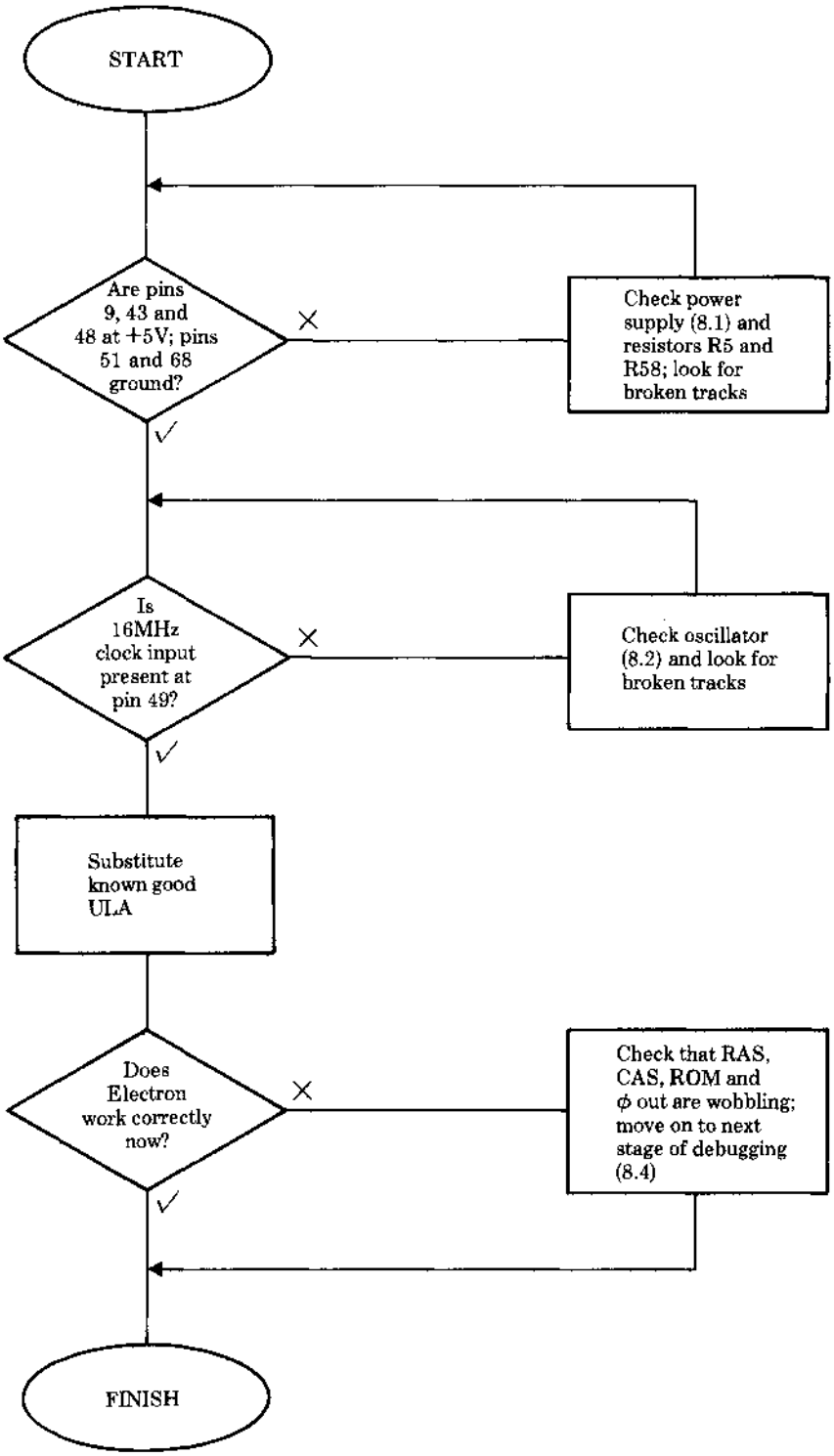
START
Are pins 9, 43 and 48 at +5V; pins 51 and 68 ground?
Check power supply (8.1) and resistors R5 and R58; look for broken tracks
Is 16MHz clock input present at pin 49?
Check oscillator (8.2) and look for broken tracks
Substitute known good ULA
Does Electron work correctly now?
Check that RAS, CAS, ROM and ϕ out are wobbling; move on to next stage of debugging (8.4)
FINISH

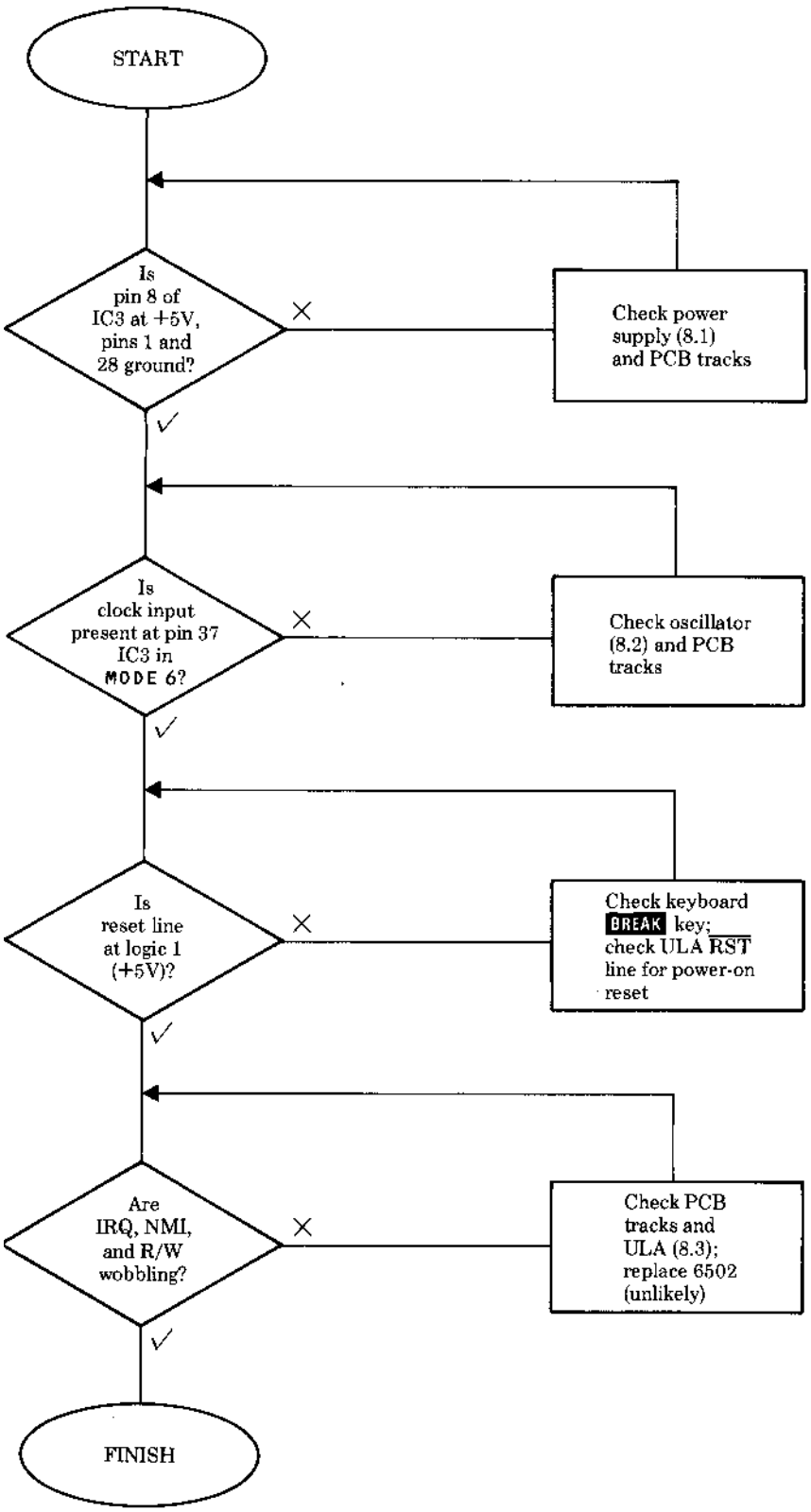
START
Is pin 8 of IC3 at +5V, pins 1 and 28 ground?
Check power supply (8.1) and PCB tracks
Is clock input present at pin 37 IC3 in MODE 6?
Check oscillator (8.2) and PCB tracks
Is reset line at logic 1 (+5V)?
Check keyboard BREAK key; check ULA RST line for power-on reset
Are IRQ, NMI, and R/W wobbling?
Check PCB tracks and ULA (8.3); replace 6502 (unlikely)
FINISH

8.4 CPU

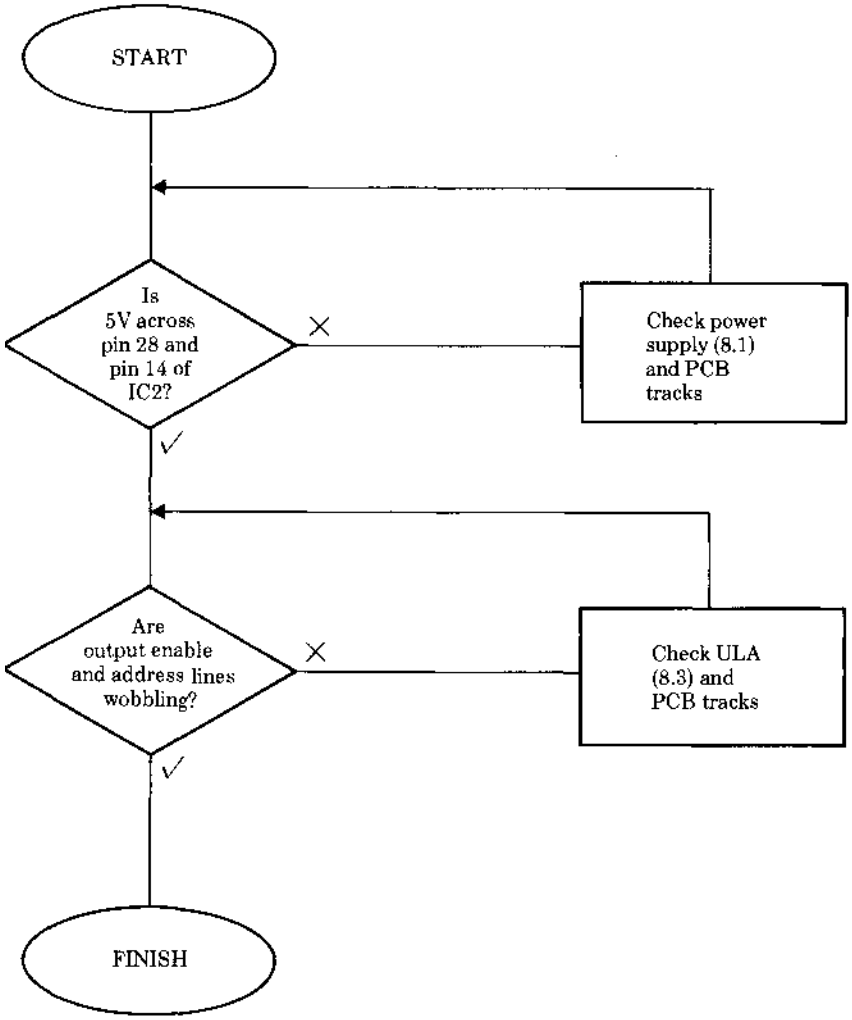
START
Is 5V across pin 28 and pin 14 of IC2?
Check power supply (8.1) and PCB tracks
Are output enable and address lines wobbling?
Check ULA (8.3) and PCB tracks
FINISH

8.5 ROM

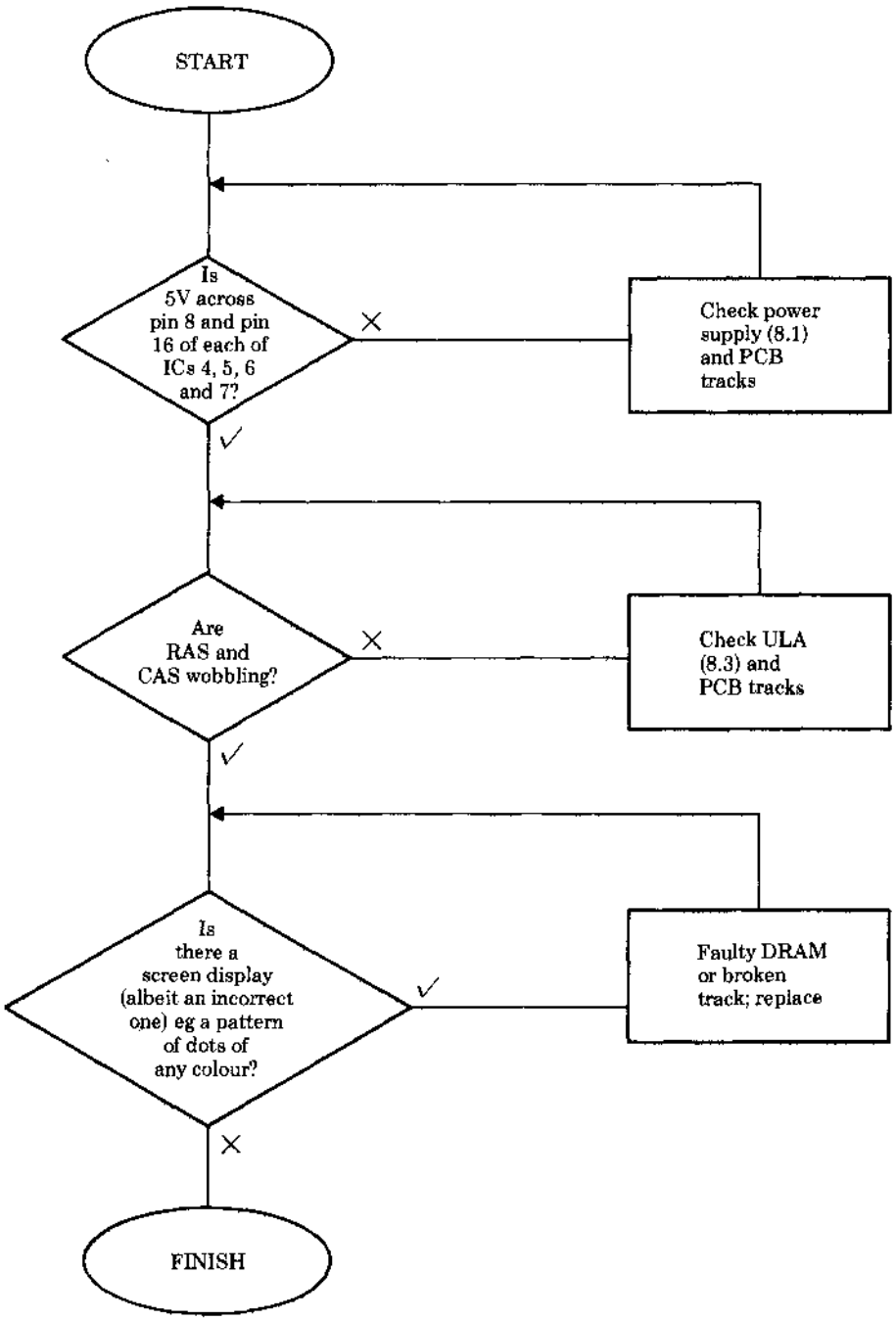
START
Is 5V across pin 8 and pin 16 of each of ICs 4, 5, 6 and 7?
Check power supply (8.1) and PCB tracks
Are RAS and CAS wobbling?
Check ULA (8.3) and PCB tracks
Is there a screen display (albeit an incorrect one) eg a pattern of dots of any colour?
Faulty DRAM or broken track; replace
FINISH

8.6 DRAMs

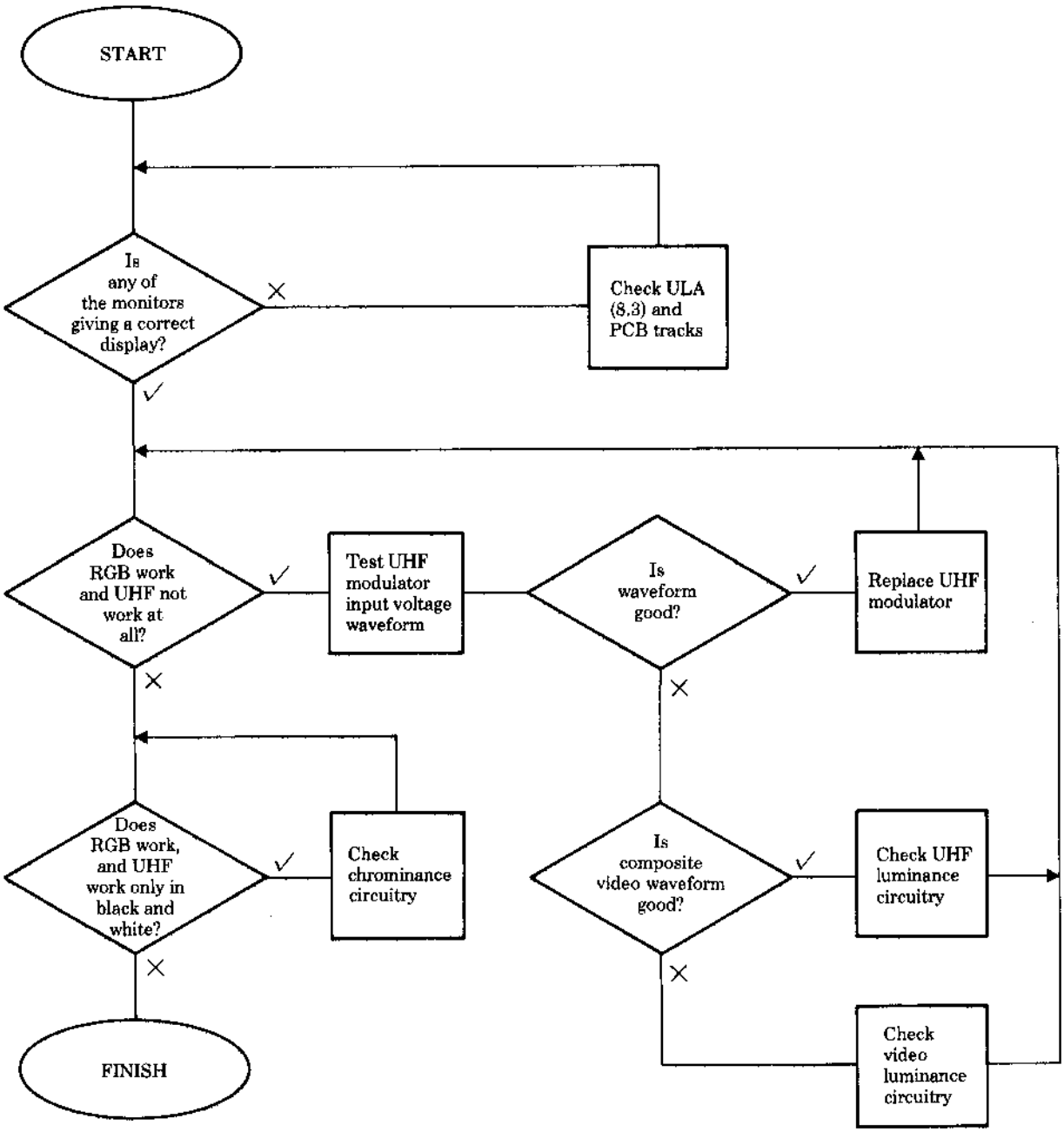
START
Is any of the monitors giving a correct display?
Check ULA (8,3) and PCB tracks
Does RGB work and UHF not work at all?
Test UHF modulator input voltage waveform
Is waveform good?
Replace UHF modulator
Does RGB work, and UHF work only in black and white?
Check chrominance circuitry
Is composite video waveform good?
Check UHF luminance circuitry
Check video luminance circuitry
FINISH

8.7 Video

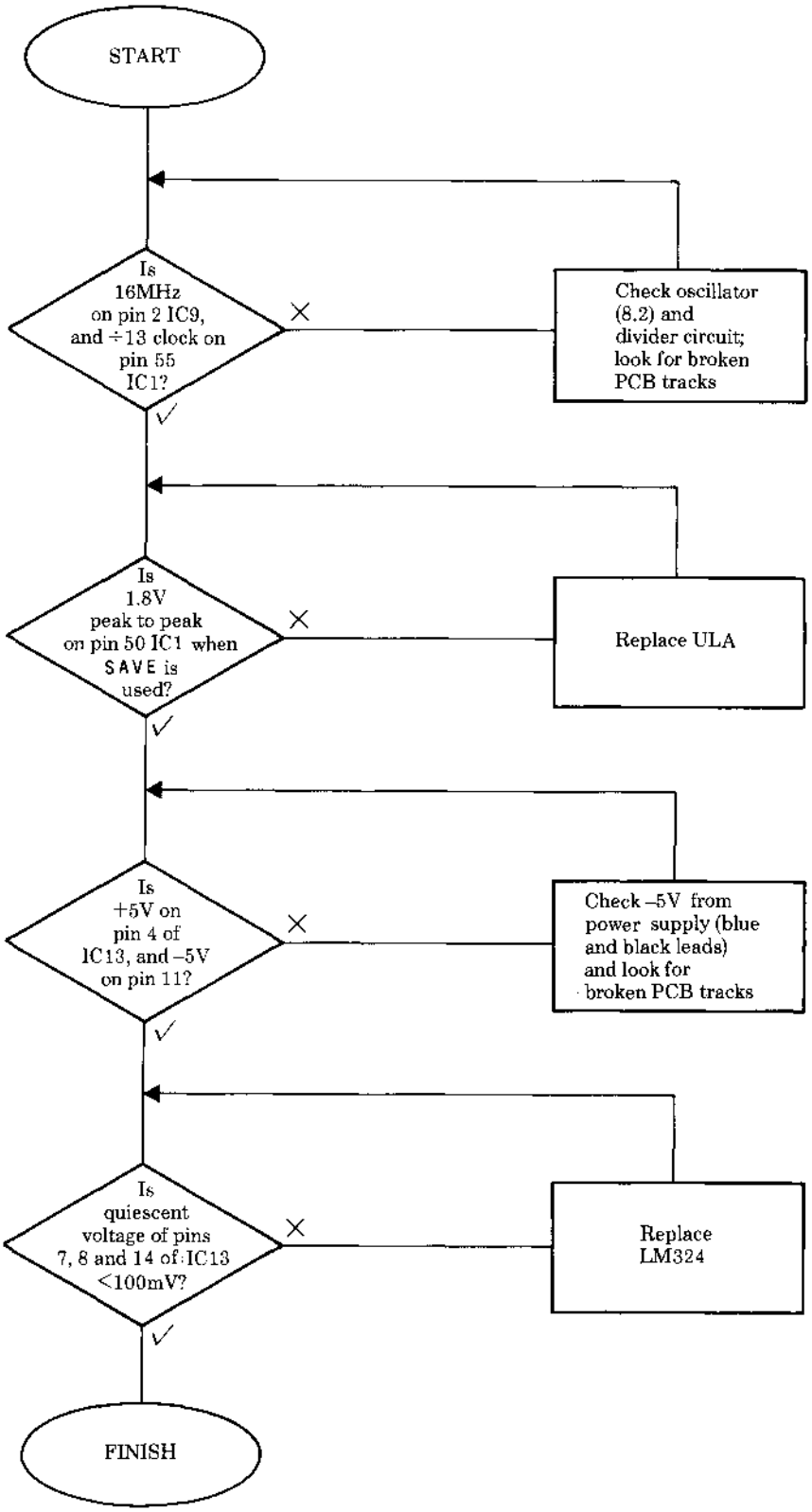

8.8 Cassette interface

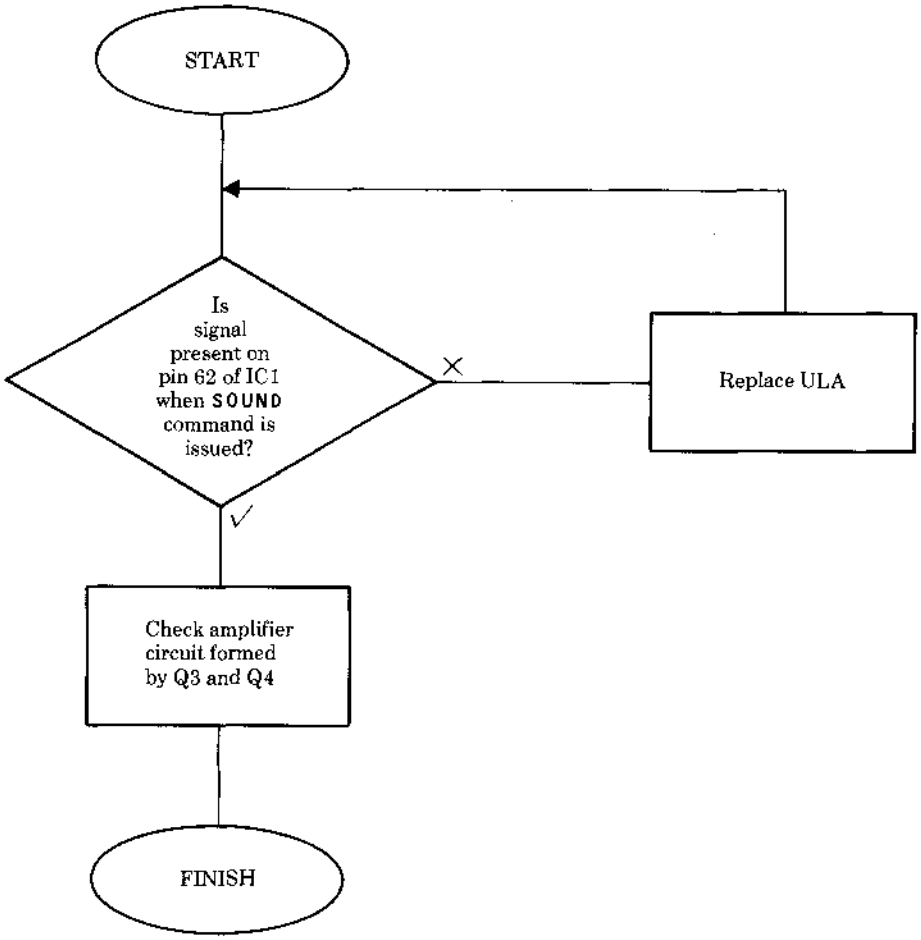
START
Is signal present on pin 62 of IC1 when SOUND command is issued?
X
Replace ULA
✓
Check amplifier circuit formed by Q3 and Q4
FINISH

8.10 Sound

Final assembly

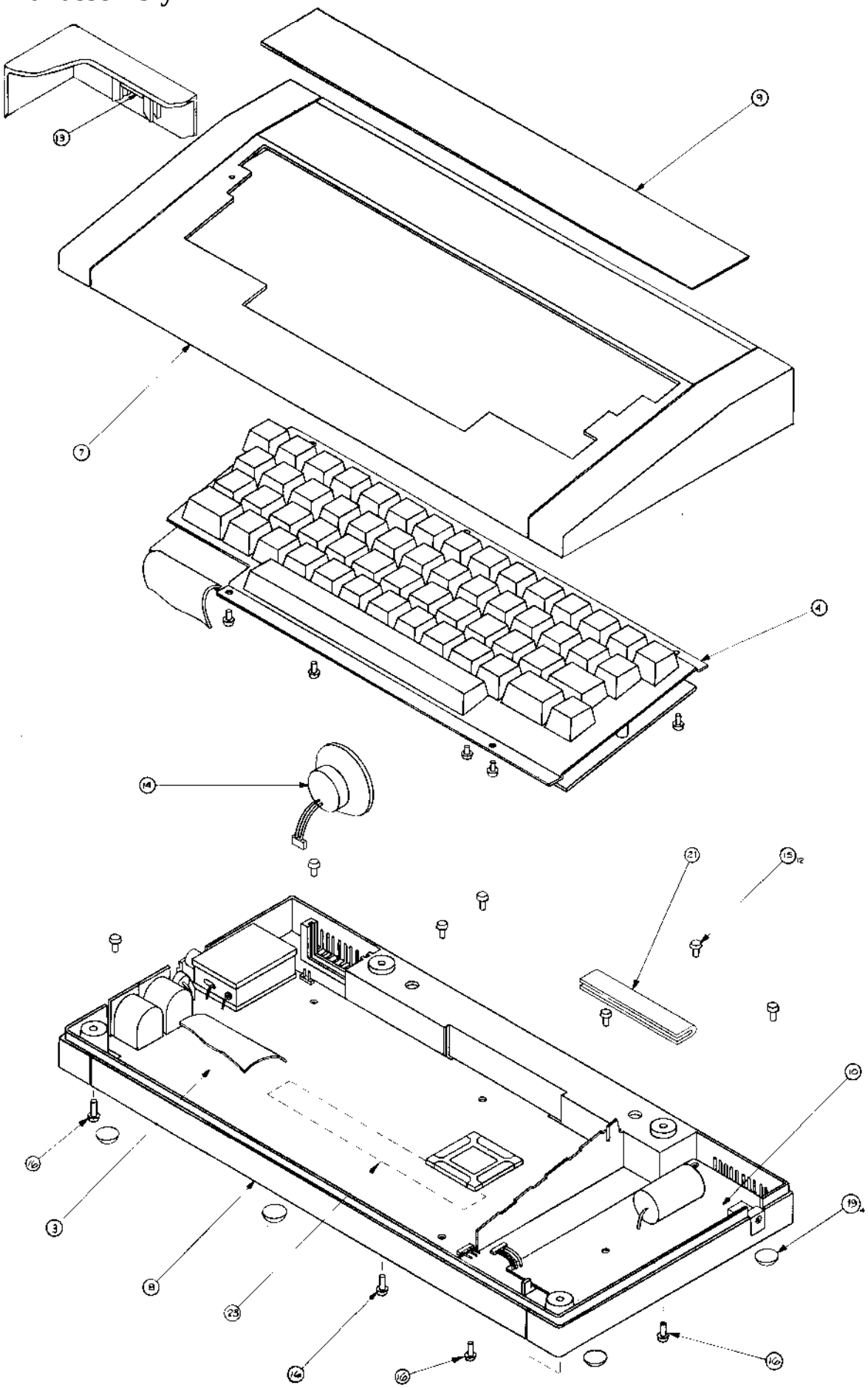

Electron block diagram

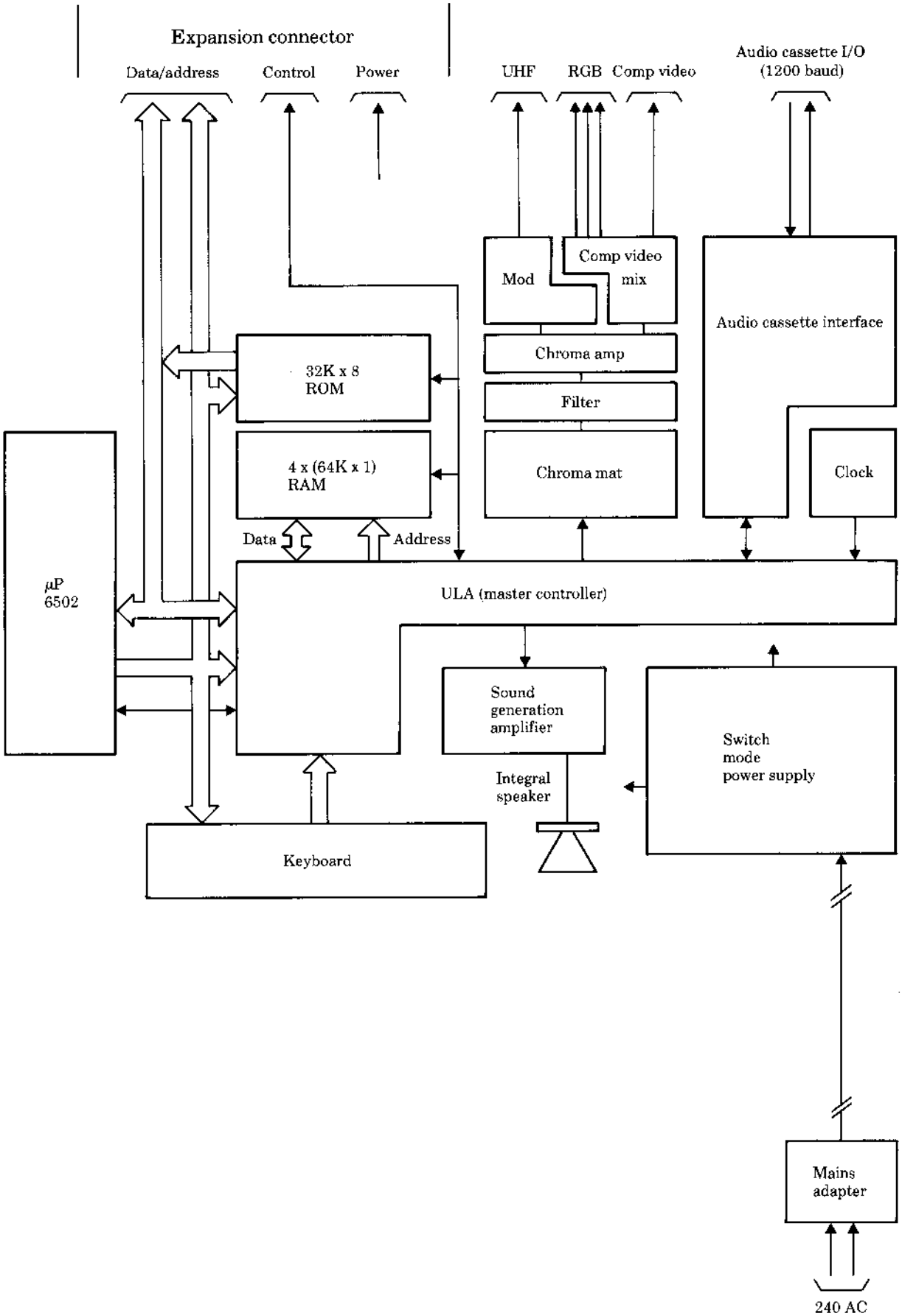

Functional block diagram of the Electron ULA

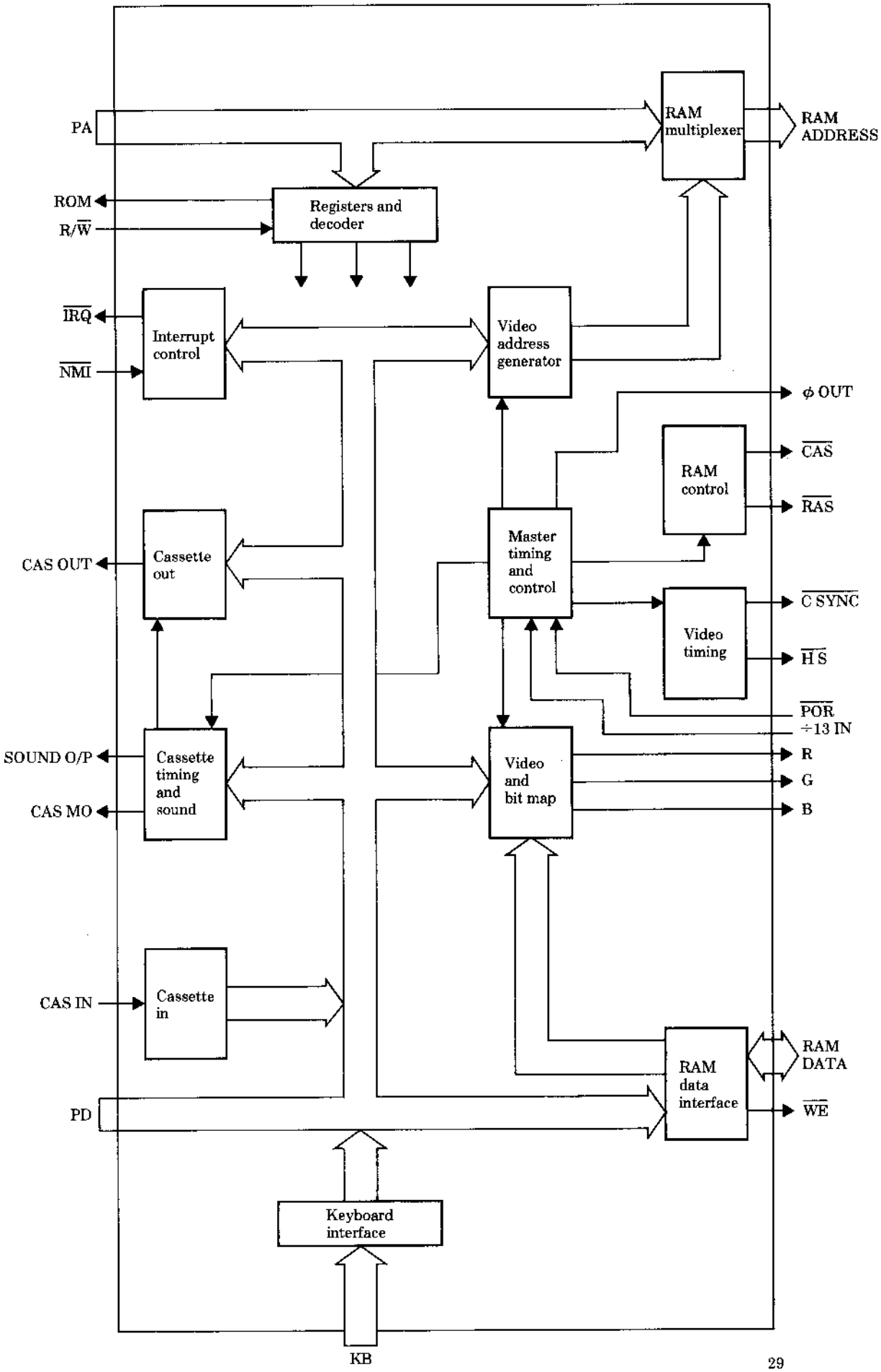

Main PCB circuit diagram

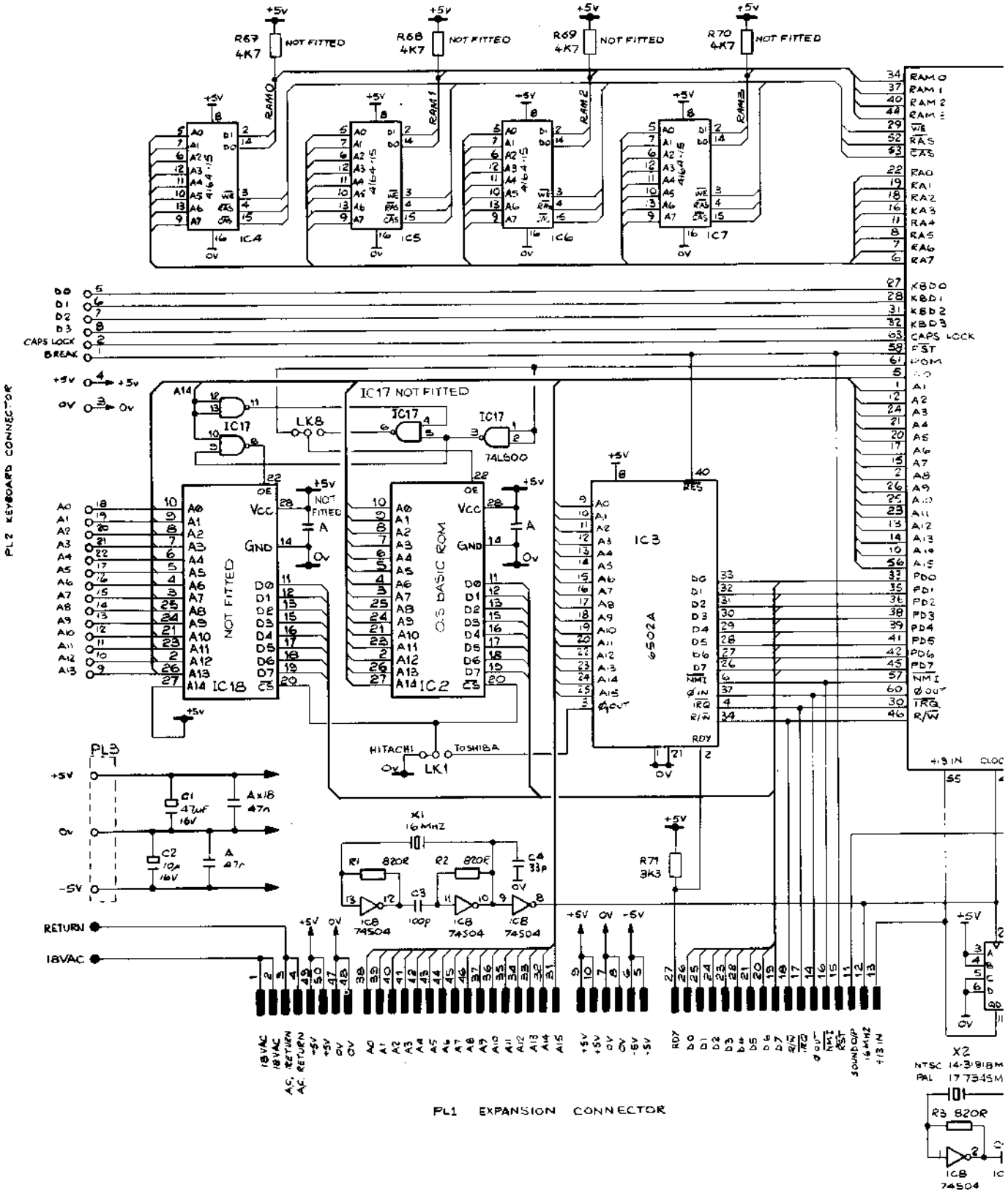

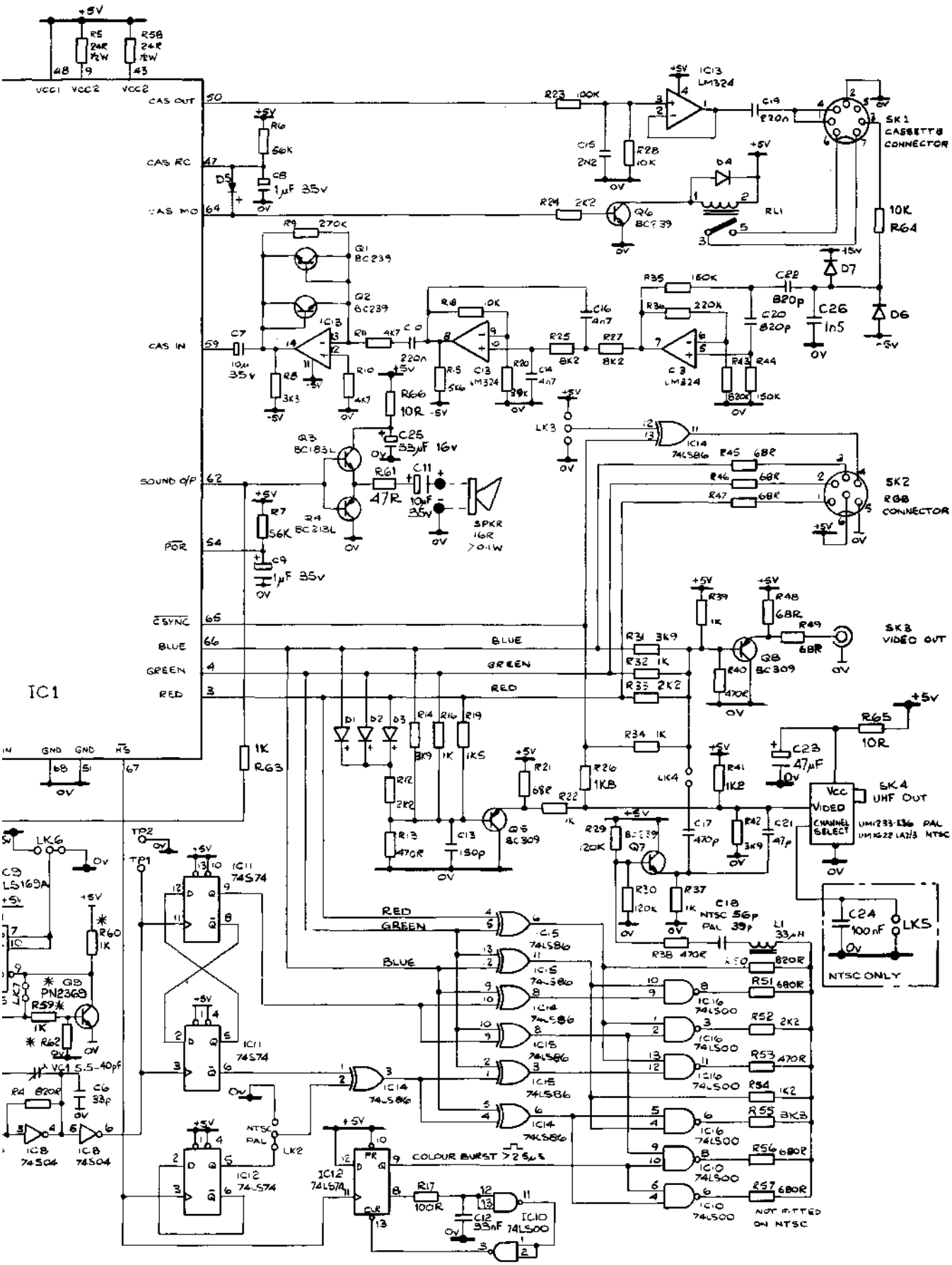

IC1
CAS OUT
CAS RC
CAS MO
CAS IN
SOUND O/P
POR
CSYNC
BLUE
GREEN
RED
SK1 CASSETTE CONNECTOR
SK2 RGB CONNECTOR
SK3 VIDEO OUT
SK4 UHF OUT
NTSC ONLY
COLOUR BURST >2.5µS
NOT FITTED ON NTSC

Main PCB layout

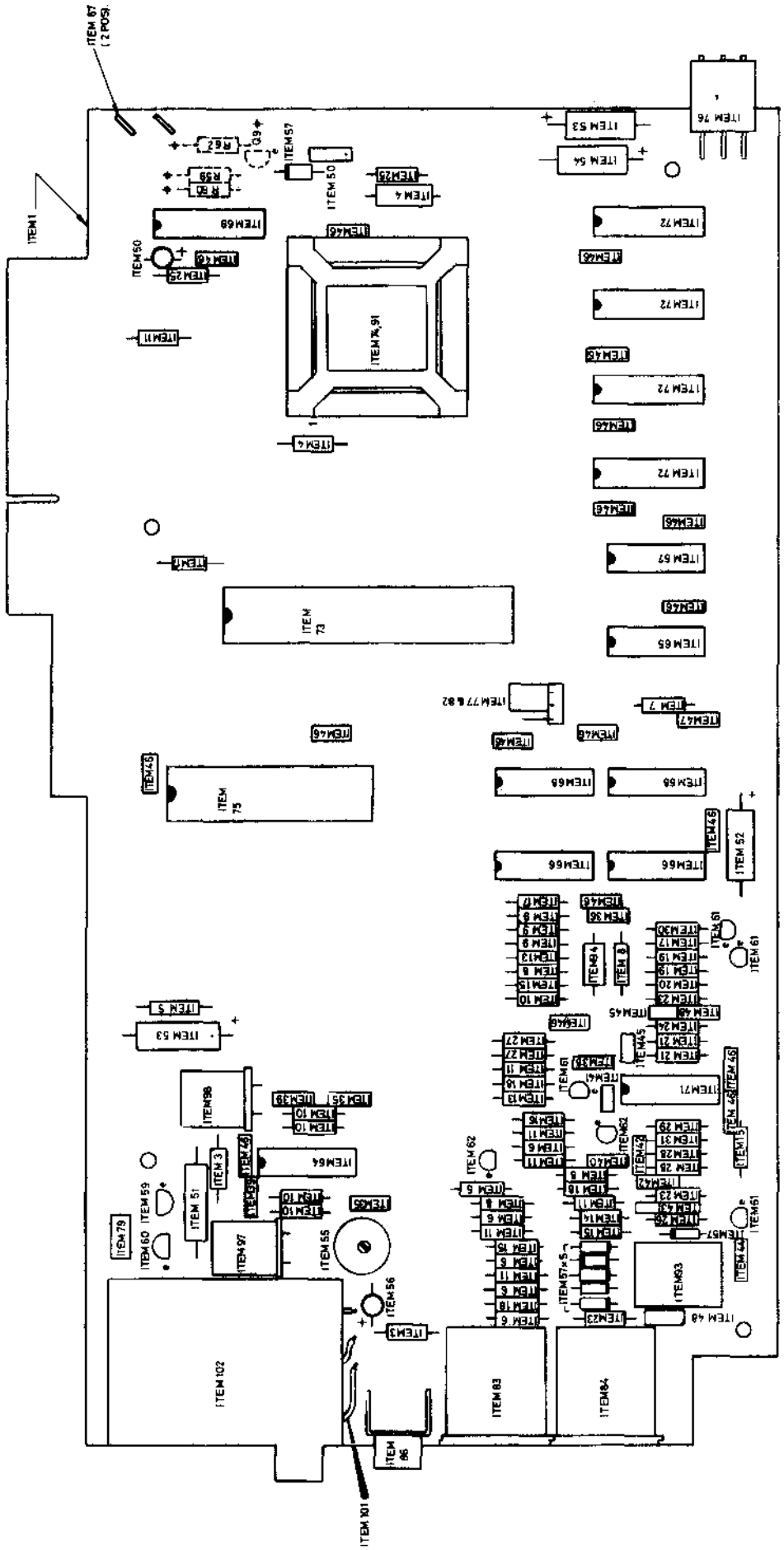

Main PCB silk-screen

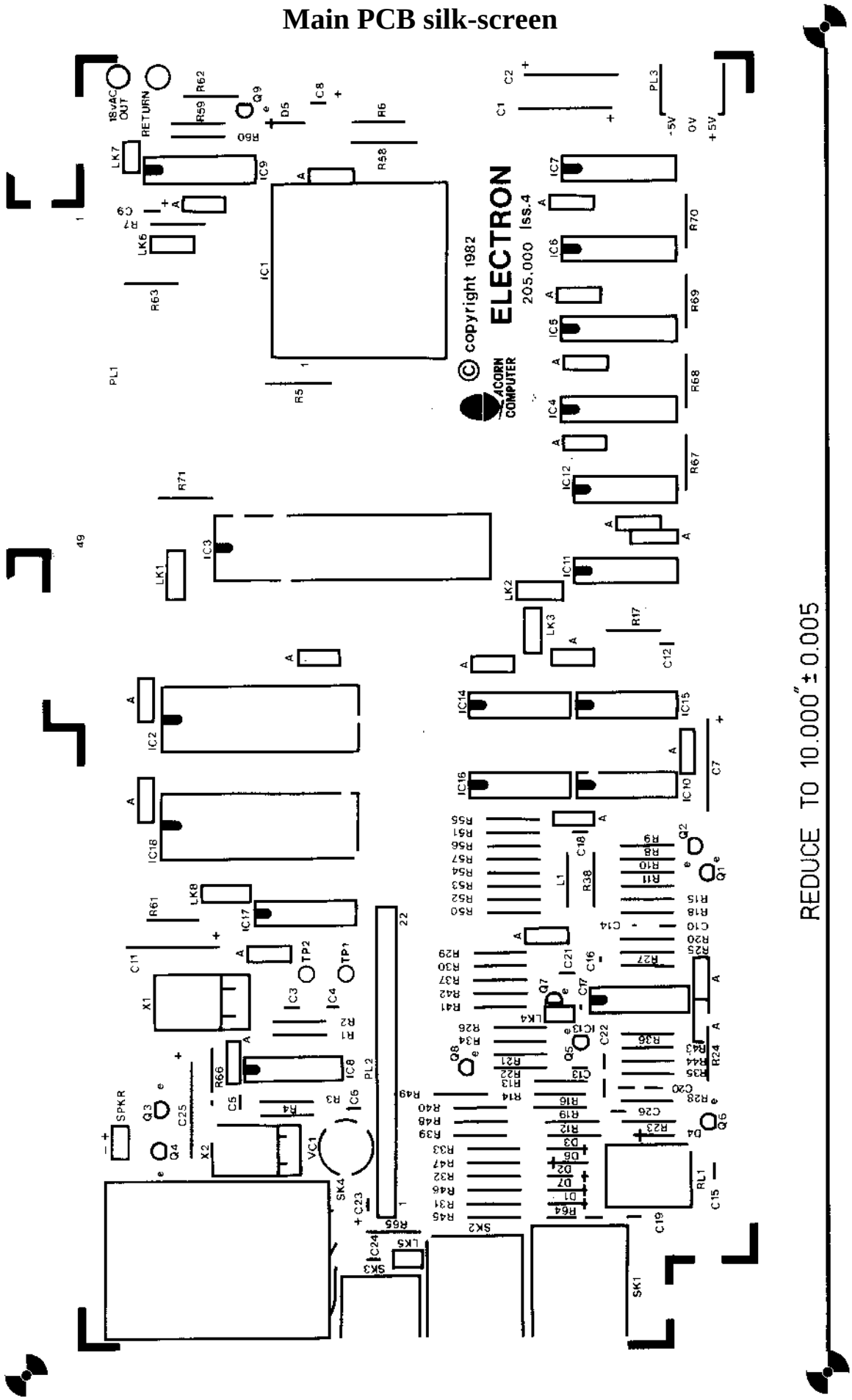

Electron power supply board circuit diagram

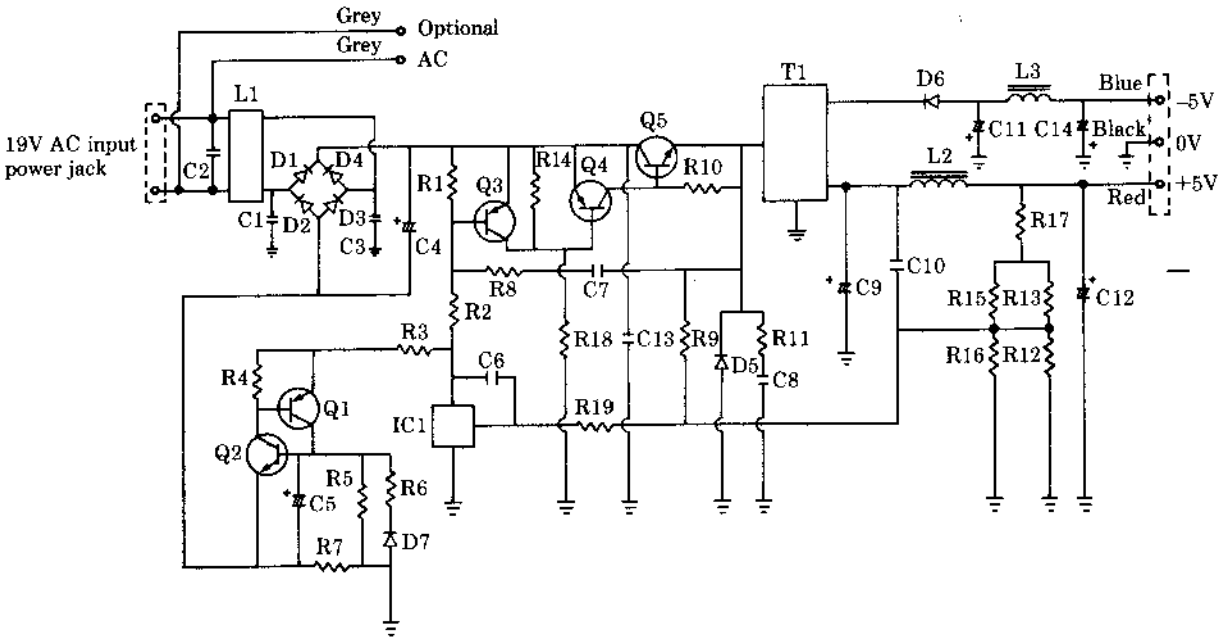

Keyboard matrix

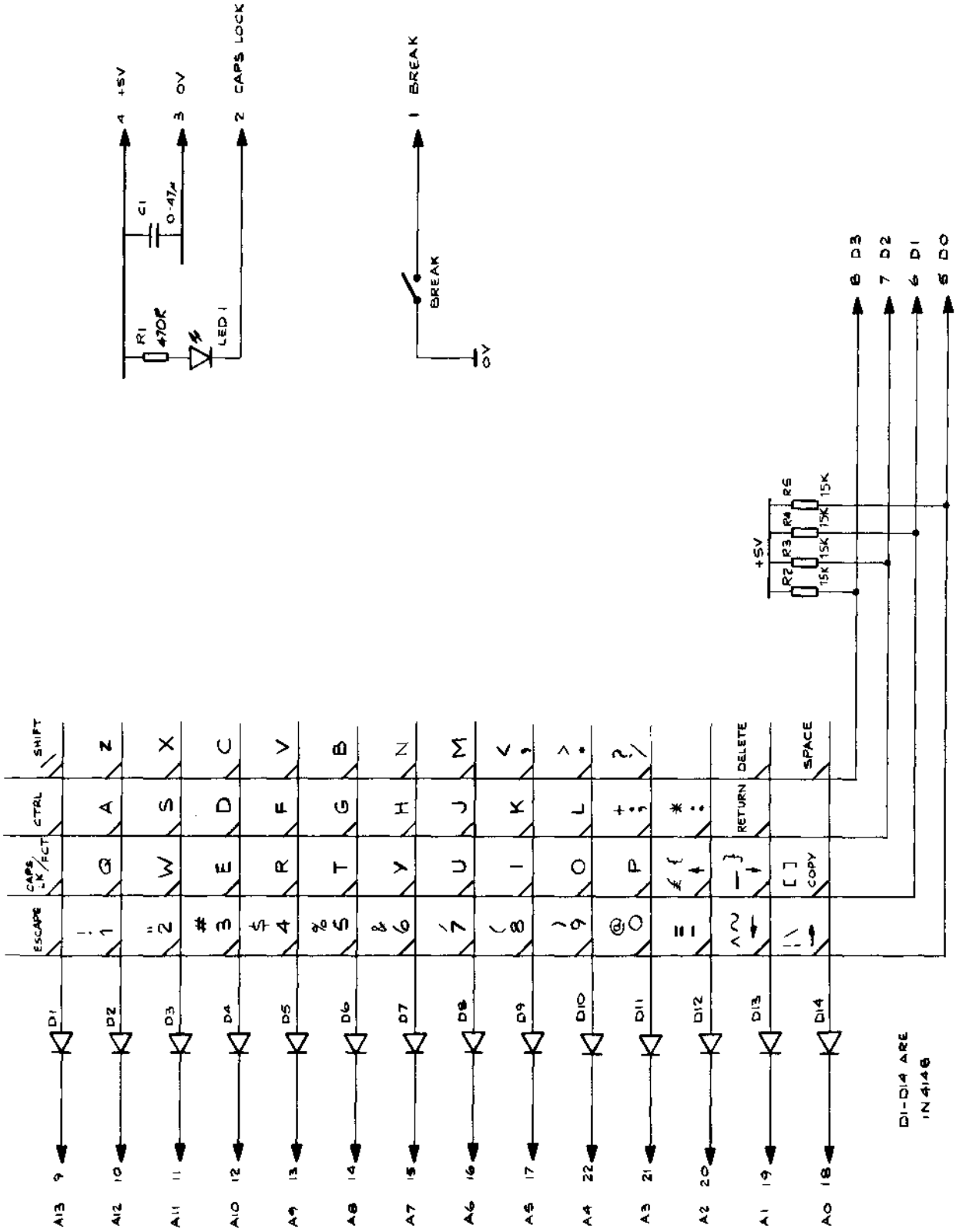

Electron parts lists

Electron keyboard assembly

Item	Part No	Description	Qty	Remarks
1	205,002	Bare PCB	1	
2	201,089	Keyboard support plate	1	
3	105,002	Assembly drawing		1 per batch
4	201,079	Keytop set	1	
5				
6	500,471	Resistor 470R 1/4W 10% carbon	1	R1
7	500,153	Resistor 15K 1/4W 10% carbon	4	R2-5
8				
9				
10	651,474	Capacitor 0.47µF disc ceramic	1	Cl
11				
12	794,148	Diode IN4148	14	D1-14
13	799,001	LED TIL212-2	1	LD1
14	880,040	Sleeve 10mm long	2	
15	886,003	Keyboard switch	56	
16				
17	882,972	Washer M3 shakeproof	2	
18	882,121	Screw M3 X 6mm pan head posidrive	2	
19				
20	870,222	Ribbon cable assembly	1	
21				
22	886,000	Space Bar wire	1	
23	886,001	Wire holder	2	
24	886,002	Push rod	2	
25				
26	890,010	RTV silicon compound	A/R	
27				
28				
29				
30				

Electron final assembly

Item	Part No	Description	Qty	Remarks
1	005,000/A	Final assembly drawing		1 per works order
2	005,000/PG	Packaging assembly		1 per works order
3	105,000	Main PCB assembly	1	
4	105,002	Keyboard assembly	1	
5				
6				
7	201,080	Case top moulding	1	
8	201,081	Case base moulding	1	
9	201,112	Case label	1	
10	332,002	PSU/PCB assembly	1	
11				
12	890,010	RTV silicon compound	A/R	
13	201,123	Self-adhesive foam pad	1	
14	201,203	Speaker	1	
15	883,306	Screw M3 X 6	12	
16	882,673	Screw No 4 X 5/16" flange head posidrive	4	
17				

18				
19	890,001	Rubber foot	4	
20	-			
21	201,248	Expansion connector cover	1	
22				
23	201,308	Registration label	1	
24				
25				
26				
27				
28				
29				
30				

Electron main PCB

Item	Part No	Description	Qty	Remarks
1	205,000	Bare PCB	1	
2	105,000	Assembly drawing		1 per batch
3	502,100	Resistor 10R ¼W 5% carbon	2	R65,66
4	508,240	Resistor 24R ¼W 10% carbon	2	R5,58
5	502,470	Resistor 47R ¼W 5% carbon	1	R61
6	502,680	Resistor 68R ¼W 5% carbon	6	R21,45,46,47,48,49
7	502,101	Resistor 100R ¼W 5% carbon	1	R17
8	502,471	Resistor 470R ¼W 5% carbon	4	R13,38,40,53
9	502,681	Resistor 680R W 5% carbon	2	R51,56,57
10	502,821	Resistor 820R W 5% carbon	5	R1,2,3,4,50
11	502,102	Resistor 1K ¼W 5% carbon	7	R16,22,32,34,37, 39, 63
12				
13	502,122	Resistor 1K2R ¼W 5% carbon	2	R54,41
14	502,152	Resistor 1K5R W 5% carbon	1	R19
15	502,222	Resistor 2K2R W 5% carbon	4	R12,24,33,52
16	502,182	Resistor 1K8 1%W 5% carbon	1	R26
17	502,332	Resistor 3K3R W 5% carbon	3	R8,55,71
18	502,392	Resistor 3K9R W 5% carbon	3	R14,31,42
19	502,472	Resistor 4K7R W 5% carbon	2	R10,11
20	502,562	Resistor 5K6R ¼W 5% carbon	1	R15
21	502,822	Resistor 8K2R W 5% carbon	2	R25,27
22				
23	502,103	Resistor 10K ¼W 5% carbon	3	R18,28,64
24	502,393	Resistor 39K W 5% carbon	1	R20
25	502,563	Resistor 56K W 5% carbon	2	R6,7
26	502,104	Resistor 100K ¼W 5% carbon	1	R23
27	502,124	Resistor 120K ¼W 5% carbon	2	R29,30
28	502,154	Resistor 150K ¼W 5% carbon	2	R35,44
29	502,224	Resistor 220K W 5% carbon	1	R36
30	502,274	Resistor 270K ¼W 5% carbon	1	R9
31	502,824	Resistor 820K ¼W carbon	1	R43
32				
33				
34				
35	685,330	Capacitor 33p plate ceramic	2	C4,6
36	631,039	Capacitor 39p plate ceramic	1	C18
37				
38	685,470	Capacitor 47p plate ceramic	1	C21
39	685,101	Capacitor 100p plate ceramic	2	C3,5

40	685,151	Capacitor 150p plate ceramic	1	C13
41	685,471	Capacitor 470p plate ceramic	1	C17
42	633,082	Capacitor 820p plate ceramic	2	C20,22
43	630,150	Capacitor 1n5 plate ceramic	1	C26
44	629,002	Capacitor 2n2 plate ceramic	1	C15
45	634,004	Capacitor 4n7 plate ceramic	2	C14,16
46	680,001	Capacitor 47n/33n decoupler	18	A
47	685,333	Capacitor 33n ceramic multilayer	1	C12
48	651,224	Capacitor 220n ceramic disc	2	C10,19
49				
50	613,100	Capacitor lu 35V tantalum	2	C8,9
51	622,330	Capacitor 33u 16V electrolytic axial	1	C25
52	624,100	Capacitor 10u 35V electrolytic axial	2	C11,7
53	622,100	Capacitor 10u 16V electrolytic axial	1	C2
54	622,470	Capacitor 47u 16V electrolytic	1	C1
55	699,004	Capacitor variable 5.5-40p	1	VC 1
56	611,470	Capacitor 47u 16V Tantalum	1	C23
57	794,148	Diode IN4148	7	D1-7
58				
59	780,183	Transistor BC 183L	1	Q3
60	780,213	Transistor BC 213L	1	Q4
61	780,239	Transistor BC239	4	Q1,2,6,7
62	780,309	Transistor BC309	2	Q5,8
63				
64	741,004	Integrated circuit 74S04	1	IC8
65	741,074	Integrated circuit 74S74	1	IC11
66	742,000	Integrated circuit 74LS00	2	IC10,16
67	742,074	Integrated circuit 74LS74	1	IC12
68	742,086	Integrated circuit 74LS86	2	IC14,15
69	743,169	Integrated circuit 74LS169A	1	IC9
70				
71	770,324	Integrated circuit LM324	1	IC13
72	704,864	Integrated circuit 4164	4	IC4,5,6,7
73	706,502	Integrated circuit 6502A	1	IC3
74	201,620	Integrated crcuit 12CO21	1	IC1
75	201,621	Integrated circuit OS/BASIC	1	IC2
76	800,852	3-way 0.156" SIL lock right angle	1	PL3
77	800,094	3-way 0.1" SIL right angle	1	LK3
78				
79	800,050	2-way SIL pin	1	SPKR
80				
81				
82	800,070	Shunt	1	LK3(E)
83	800,002	6-pin DIN socket	1	SK2
84	800,003	7-pin DIN socket	1	SK1
85				
86	800,611	Video connector	1	SK3
87	800,200	Faston tab	2	18 VACIN, RETURN
88				
89				
90				
91	800,168	IC socket 68-way	1	IC1
92				
93	810,001	Relay	1	RL1
94	860,005	Coil 33uH	1	L1
95				
96				
97	820,177	Crystal 17.7345MHz	1	X2

98	820,160	Crystal 16MHz	1	X1
99				
100				
101	880,040	Sleeving	A/R	Use with item 102
102	825,000	UHF modulator UM1233-E36	1	SK4
103				
104				
105				
106				
107				
108				
109				
110				

NOTES

NOTES

Acorn Computers Limited, Fulbourn Road, Cherry Hinton, Cambridge CB1 4JN, England